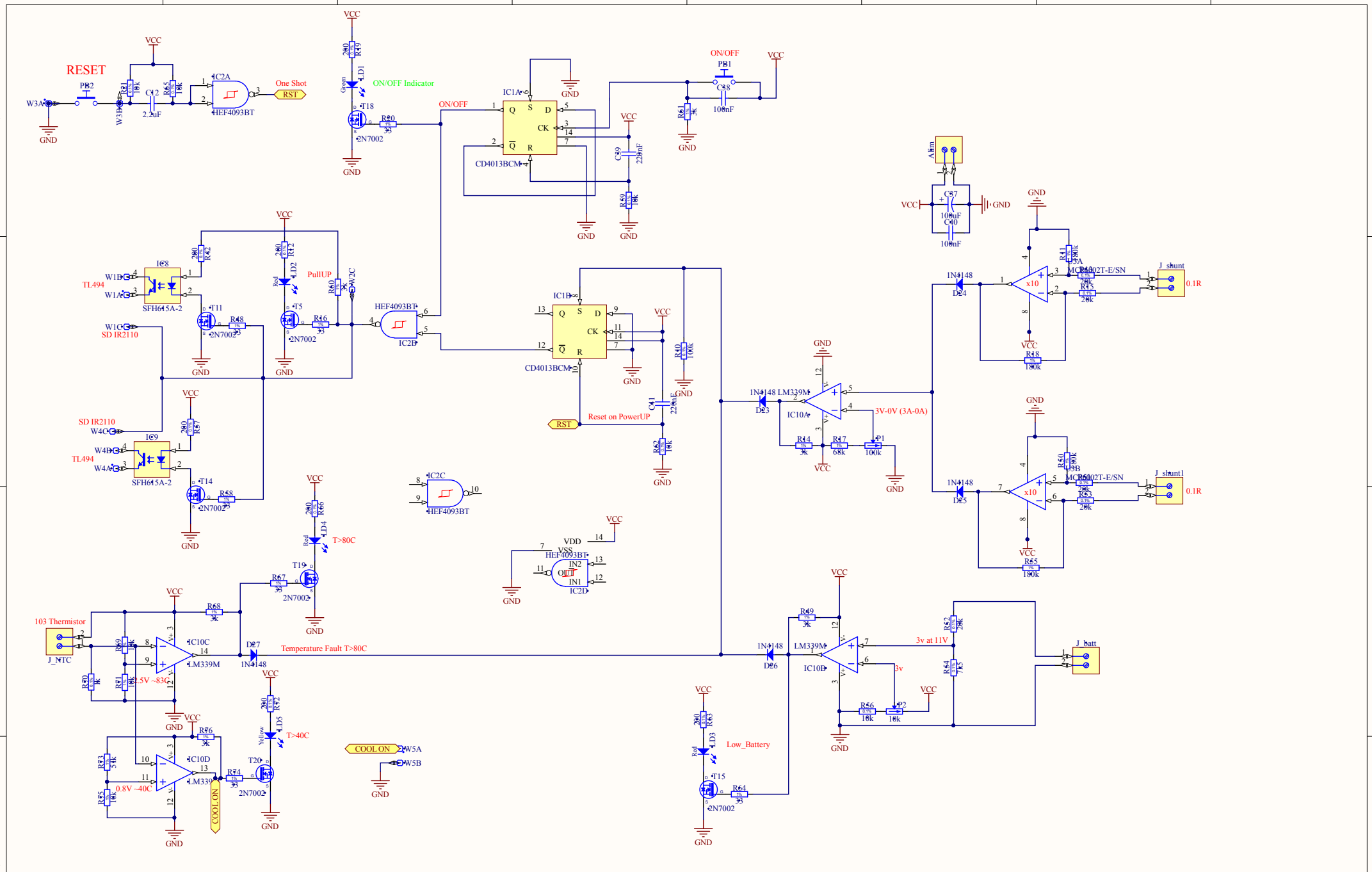

Title		
Protecție Flip-Flop		
Size: A3	Number	Revision: R4
Date: 09.01.2016		Sheet of
File: C:\Users\..\protectie.SchDoc		Drawn By: Stefan M.