The Stable Platform

Ver 1.0 (2017-8-29)

目录

1 Overall design 1
1.1 introduce 1
1.2 Basic principles 2
1.2.1 plan drawing 2
1.2.2 Physical photo 2
1.3 3d drawing 3
1.4 Component list and parameters 4
2 Mechanical and electronic parts drawing 8
2.1 Electrode distribution 8
2.2 Power connection 8
3 Assembly 9
3.1 Overall assembly 9
3.2 Positive and negative electrodes 10
4 Circuit diagram 11
5 user's Guide 11

1 Overall design

1.1 introduce

Eternity Platform converts aether energy from space to the flift force wich is shaped because of the metal plates inside and the bee cells. The metal plates also produce very interesting vortex anomaly of gravity field. In results We have antigravity vortex(spinning) field powered by aether. The platform also can work for about 2-10 minutes after power off the tesla off. It because of time distortions wich occur during work of the platform. Also the invisibility can be done sometimes when you fly on the platform. Do not worry if you see something strange it is normal… after power up the tesla coil when voltage go to the panels. You have to find right position of the metal triangle to tune the field later you should to observe strange noises like ultrasound. And than you find the anti-gravity lift. You can now sit on stand on the platform and put the plastic isolator up you will fly above the ground and put moving pipe forward and you fly forward.

1.2 Basic principles

1.2.1 plan drawing

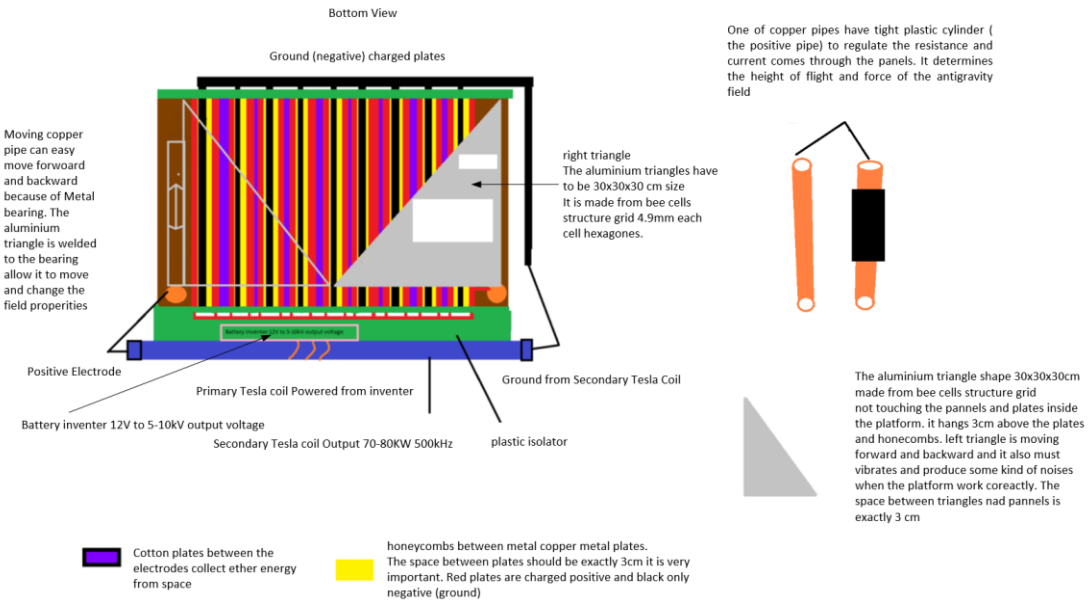

figure 1 plan drawing

1.2.2 Physical photo

Physical photo see figure 2

figure 2 Physical photo

1.3 3d drawing

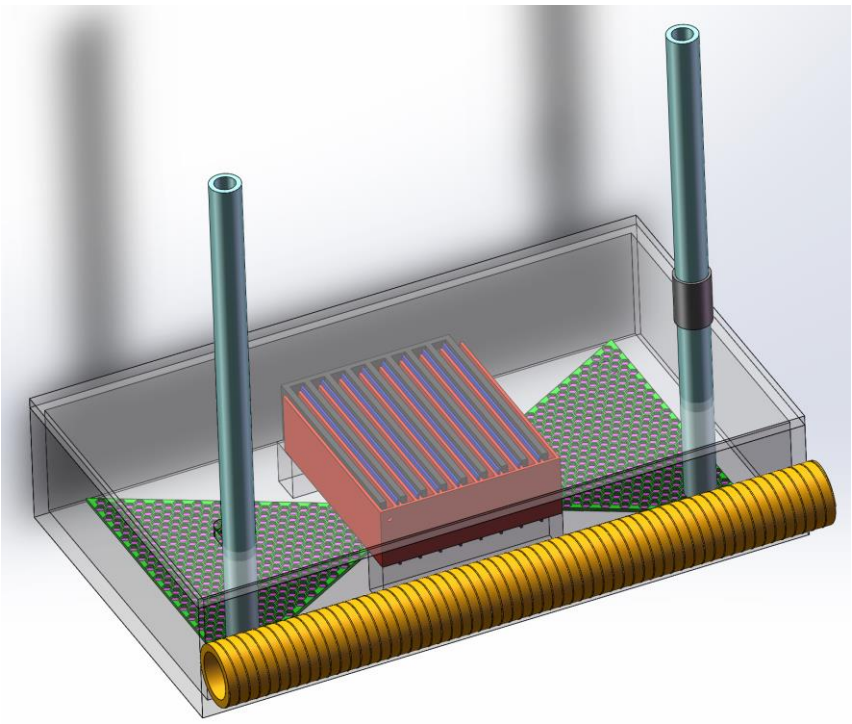

figure 3 3d drawing

1.4 Component list and parameters

Table 1 component list and parameters

Name	amount	parameters
Positive electrodes	18	6cm x 19cm x 3mm
Negative electrodes	9	6cm x 19cm x 6mm
Honeycomb plates	18	7cm x 20cm x 3mm
Cotton plates	8	7cm x 20cm x 2mm
Aluminum triangles	2	30cm x 30cm x 30cm x 6mm
Copper pipes	2	20cm external diameter

(1) The positive electrodes (red plate), 6cm x 19cm, 3mm thickness, see Figure 4

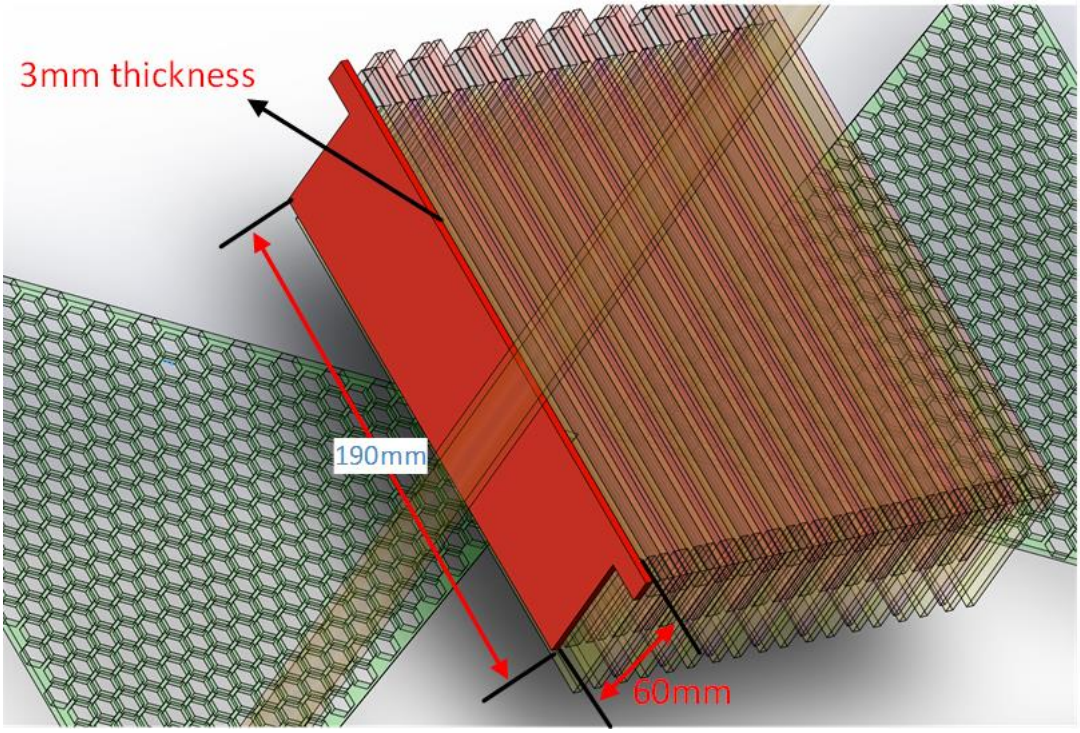

Figure 4 Positive electrodes

(2) The negative electrodes (black plate), 6cm x 19cm, 6mm thickness, see Figure 5

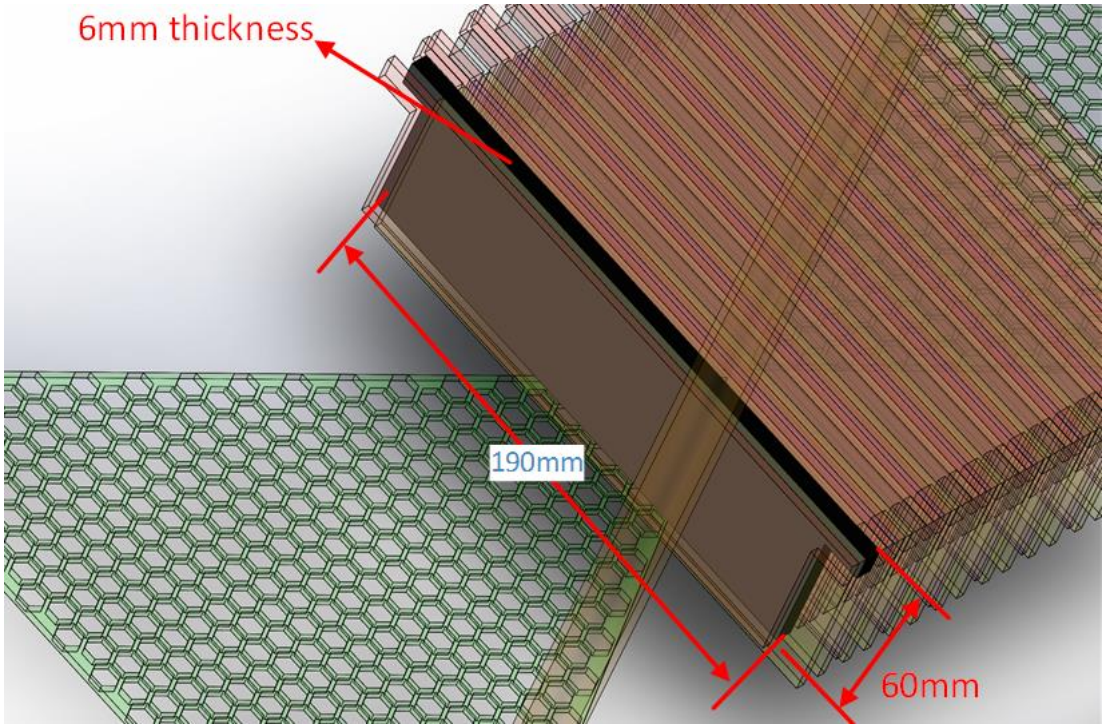

Figure 5 Negative electrodes

(3) The natural honeycombs (yellow plate), 6cm x 19cm, 3mm thickness, see Figure 6

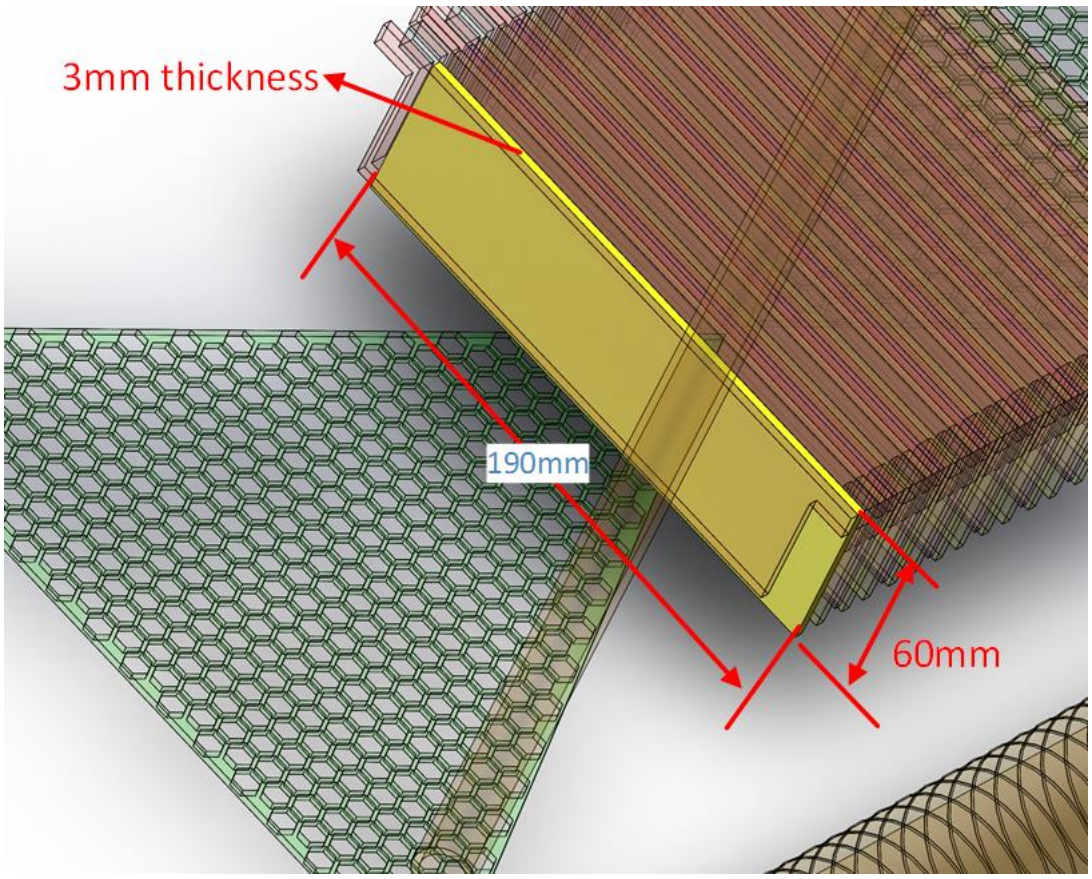

Figure 6 Nature honeycombs

(4) Natural cotton (purple plate) 7cm x 20cm, 2mm thickness, see

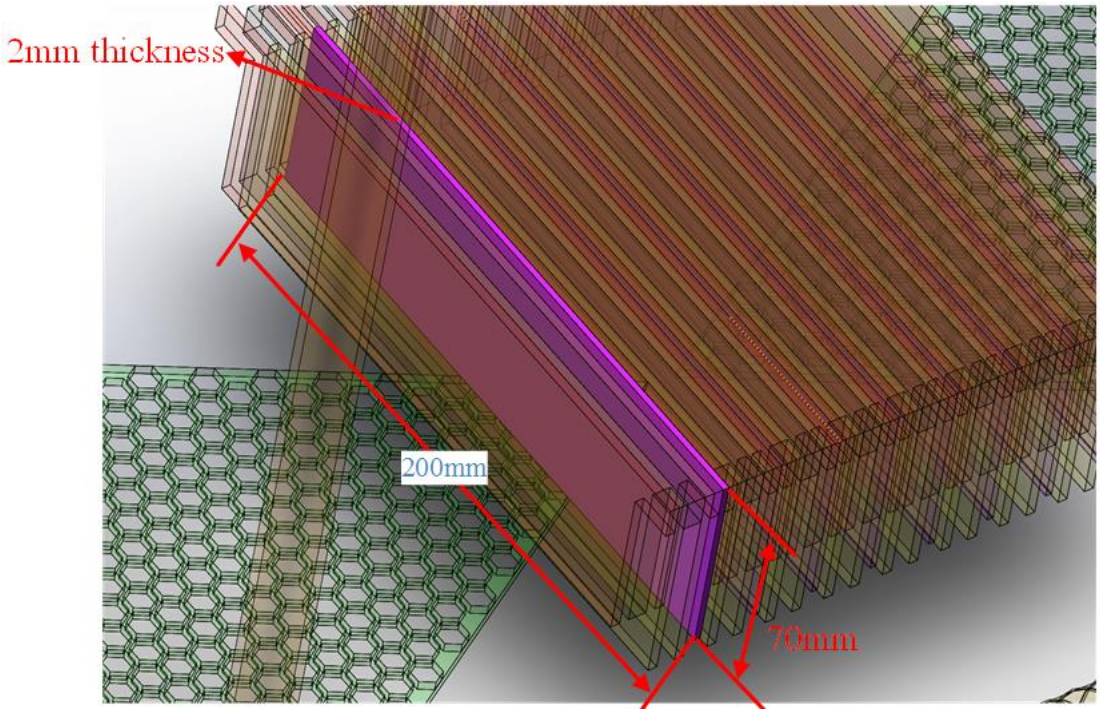

Figure 7 Nature cotton plate

(5) Aluminum triangles, 300mm x 300mm x 300mm, 6mm thickness, see Figure 8 and Figure 9

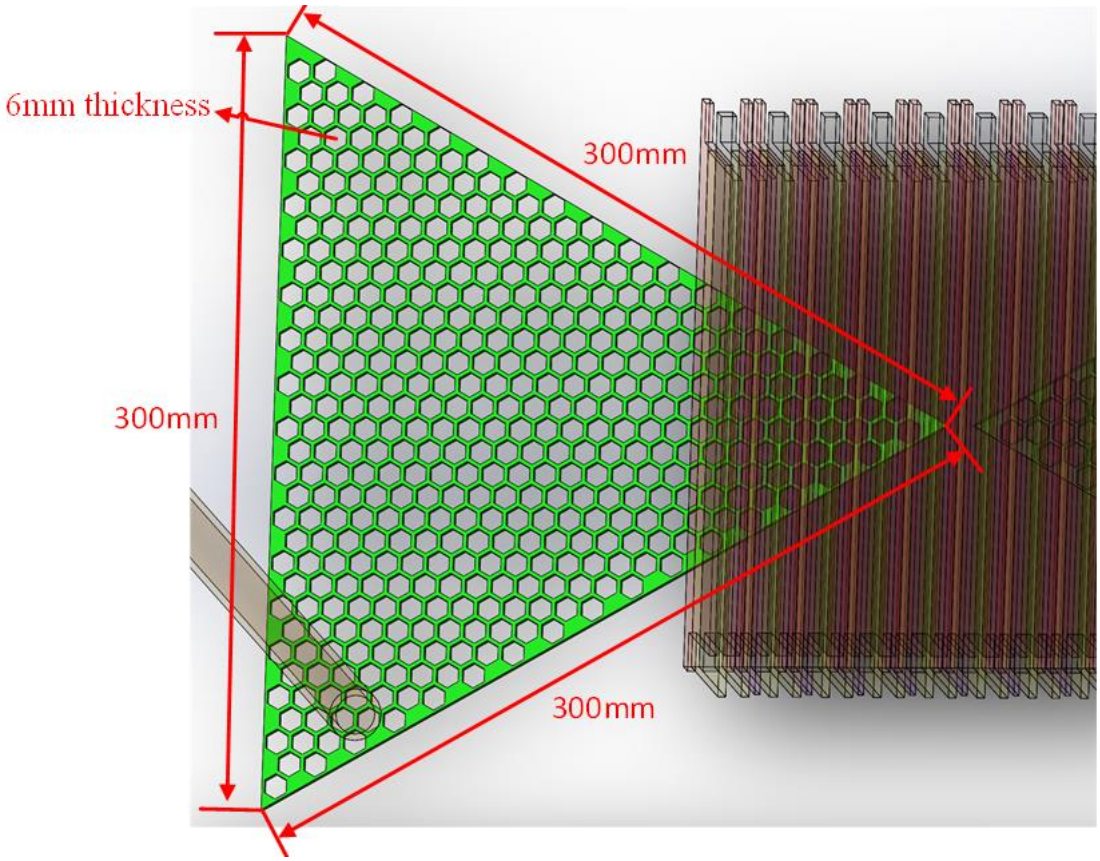

Figure 8 Aluminum triangles

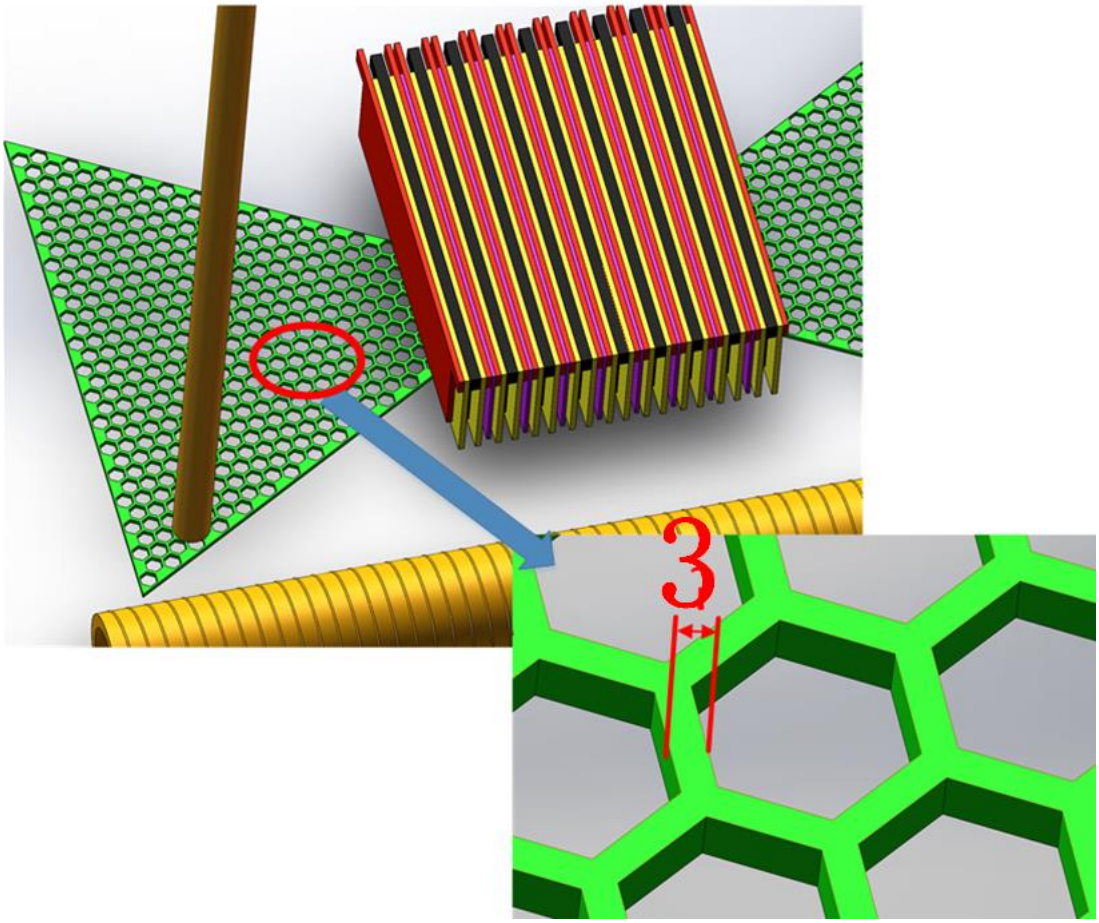

Figure 9 Details of aluminum triangles

2 Mechanical and electronic parts drawing

2.1 Electrode distribution

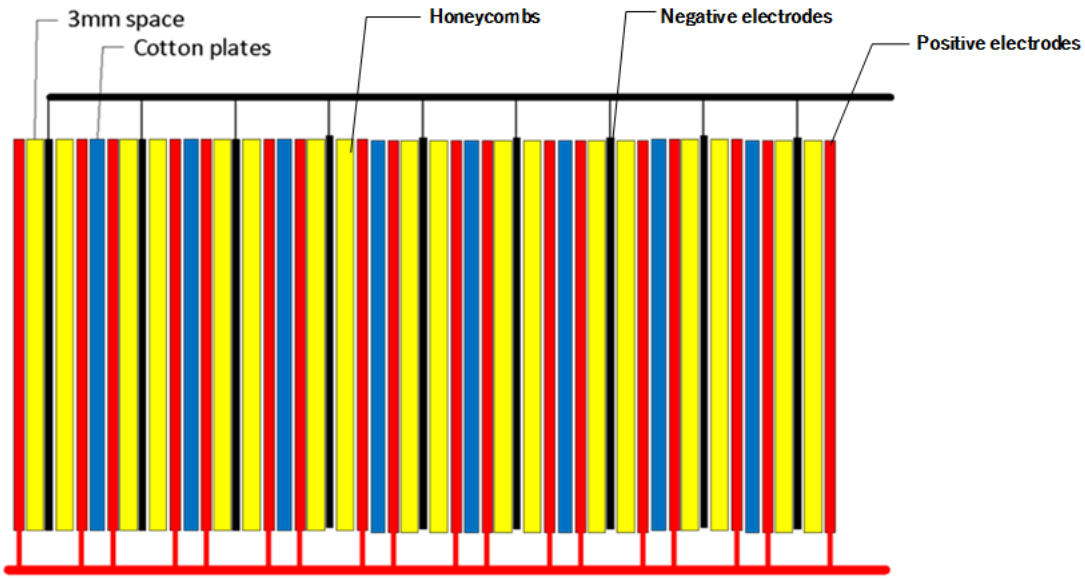

Figure 10 Electrode distribution

2.2 Power connection

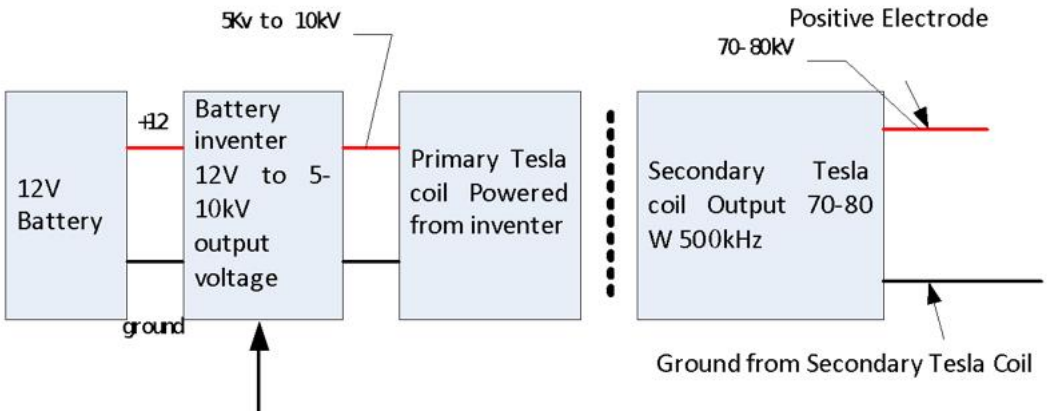

figure 11 Power connection

3 Assembly

3.1 Overall assembly

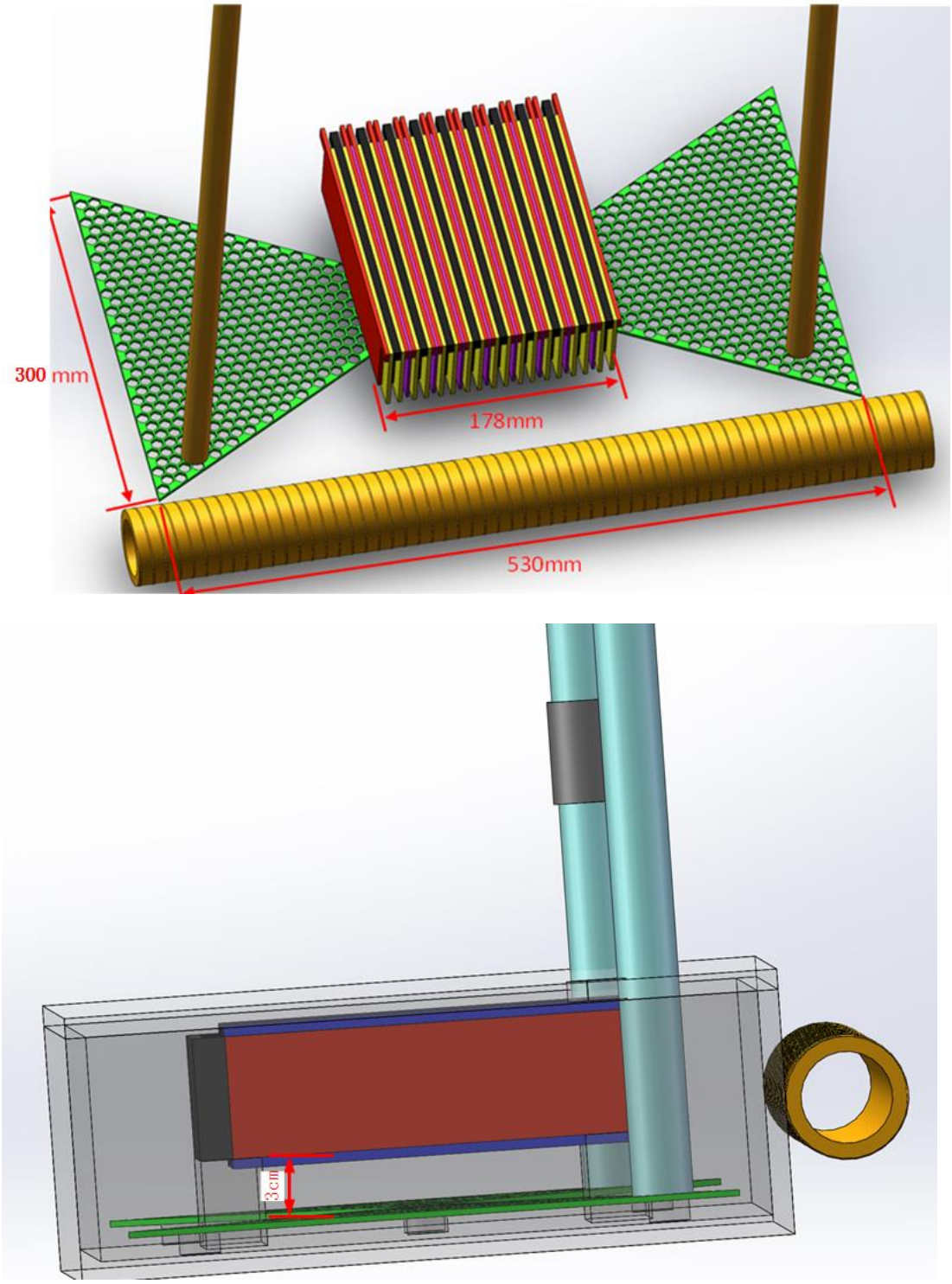

figure 12 Overall assambly

3.2 Positive and negative electrodes

The wax honeycombs should touch negative and the positive plates. And the bottom of honeycombs should be close to negative electrodes.

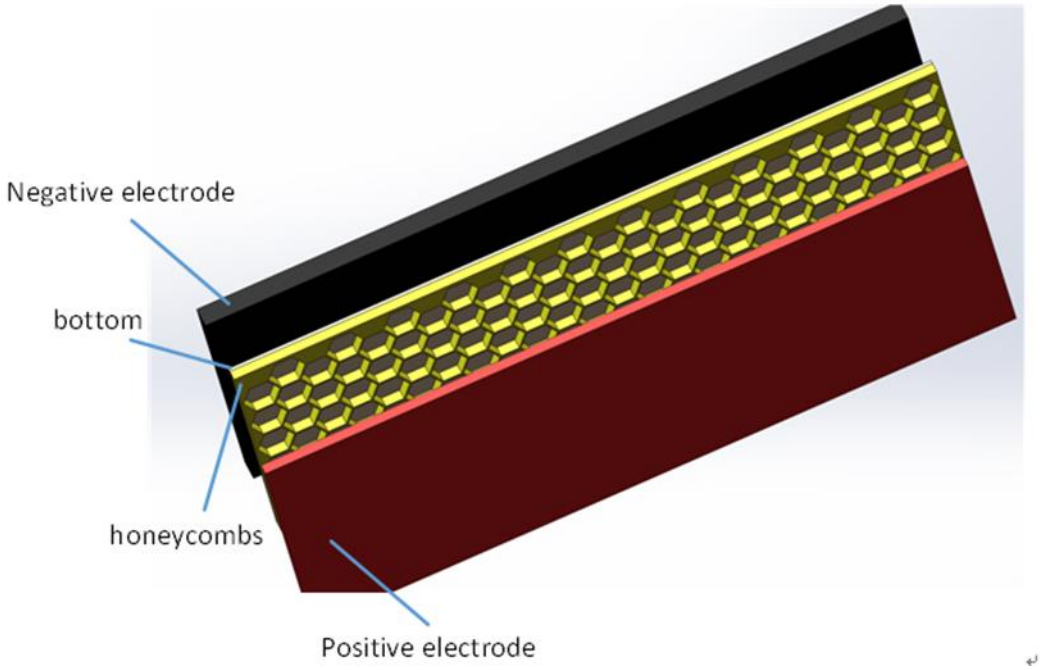

figure 13 Positive and negative electrodes

4 Circuit diagram

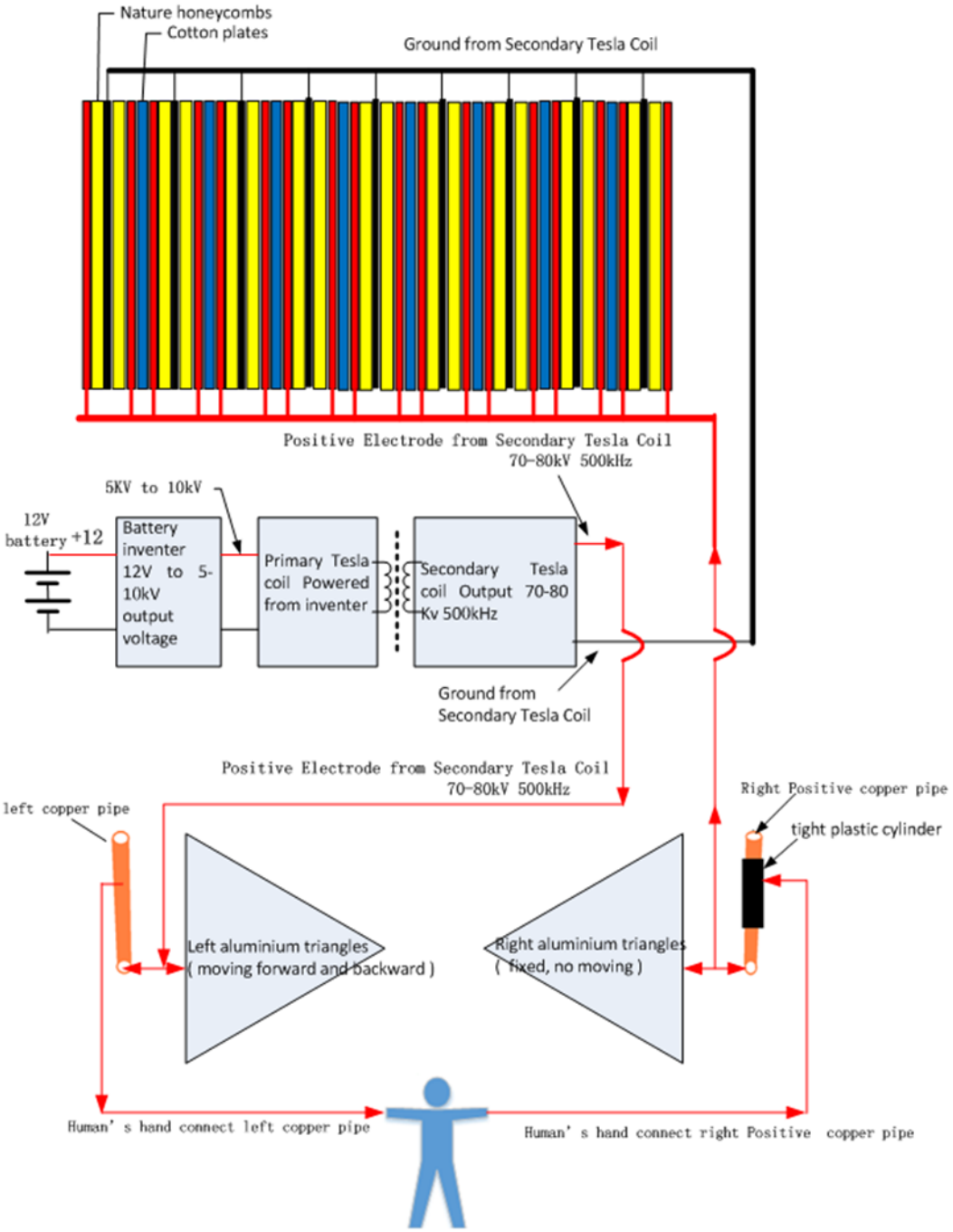

figure 14 Circuit diagram

5 user's Guide

You can make Tesla coil as your design. But you should ensure the output voltage is between 70-

80kv, 500kHz. The size and turns of coils are not important.