AJAY K. HARI, Senior Applications Engineer, National Semiconductor
PHOENIX DESIGN CENTER, Phoenix

Voltage-Mode Push-Pull Converters Deserve a Second Look

Voltage-mode control of a push-pull converter can saturate the transformer core; however, if the transformer operates in the linear region of the B-H curve, an unbalanced magnetizing current is fine.

Double-ended topologies, such as push-pull, half-bridge and full-bridge, allow higher efficiencies and greater power densities compared with common single-ended topologies, such as flyback and forward converters. Therefore, double-ended topologies are increasingly popular in many applications, especially telecom and automotive.

Designers familiar with double-ended topologies recognize that current-mode control typically is employed for push-pull and full-bridge topologies, whereas voltage-mode control is employed for half-bridge topology.

All double-ended topologies are susceptible to transformer core saturation. Any asymmetry in the volt-second product applied between the two phases results in flux imbalance that causes dc build-up. This will eventually push the transformer toward saturation. In the push-pull and full-bridge topologies, current-mode control corrects for any asymmetry by sensing and controlling the peak currents in the primary. In half-bridge topology, one side of the transformer primary is connected to the center point of the input capacitive voltage divider. Any volt-second imbalance causes voltage at the center point to drift either toward the input voltage or ground. Current-mode control reinforces this trend, and the center point of the capacitive divider bank will run away. However, in voltage-mode control of half-bridge topology, if a phase is on longer, then the voltage applied to the transformer is lower because the capacitors are discharged longer. The volt-second product is thus regulated. Therefore, the drift in the voltage at the center point of the capacitive divider acts as a negative feedback, avoiding transformer saturation. Similarly, there is a need for negative feedback in push-pull topology for voltage-mode control to work.

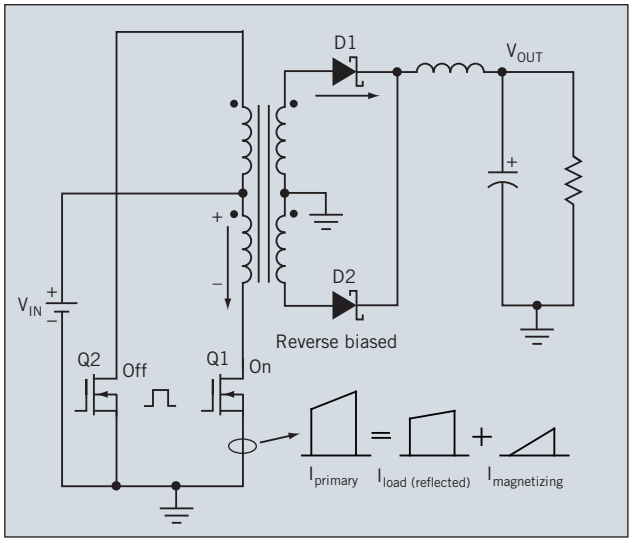

Fig. 1. In the push-pull circuit, the volt-second product applied to the transformer is proportional to the flux-density (B) swing on the B-H curve.

VOLT-SECOND IMBALANCE IN PUSH-PULL TOPOLOGY

Consider a push-pull topology, as shown in *Fig. 1*. When Q1 is turned on, input voltage (V_{IN}) minus a voltage drop due to the $R_{DS(ON)}$ of Q1 and dc resistance (DCR) of the windings is applied to the transformer for an on-time (T_{ON}). The volt-second product applied to the transformer is proportional to the flux-density (B) swing on the B-H curve (i.e., $\Delta B \propto V \times T_{ON}$).

When Q1 turns on, as shown in *Fig. 2*, flux swings from A to A', and the swing is proportional to the $V \times T_{ON}$ product. Similarly, when Q2 turns on, the voltage across the transformer is reversed (the dotted end is now grounded) and magnetizing current also is reversed. Thus, the flux swings into the 3rd quadrant from A' to A. If the volt-seconds applied to the transformer in one phase is equal to the volt-seconds applied in the subsequent phase, then the transformer will reset itself (i.e., flux-density will come back to its original position). Fig. 2 illustrates ideal waveforms when the transformer resets itself. Note that the magnetizing current is balanced without any dc offset, and the primary currents in both phases have the same peak.

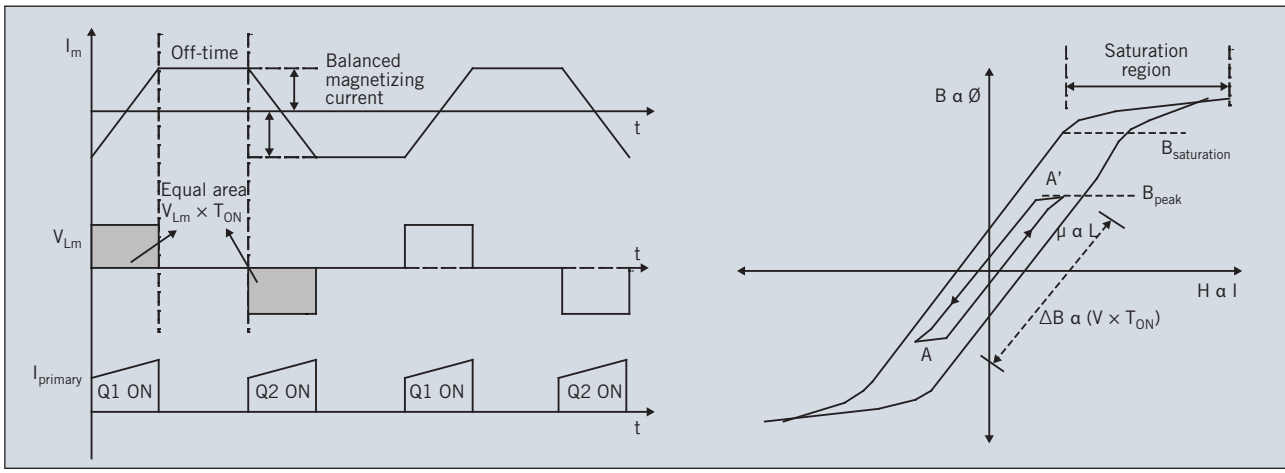

Fig. 2. Symmetrical flux-density swing. Output voltage shows a balanced magnetizing current. The B-H curve shows that when the transformer resets itself, the magnetizing current is balanced without any dc offset and the primary currents in both the phases have the same peak value.

In practice, it is almost impossible to match either the on-resistance of the MOSFETs or DCR of the primary windings, which results in unequal voltage applied to the transformer from one phase to another. In a similar fashion, there is always a small amount of imbalance in the on-time, either because of differences in the primary MOSFET's turn-on and turn-off timing and pulse-width jitter due to IC or because of both. This imbalance will result in a flux-density swing with an offset from the origin (*Fig. 3*). Therefore, some dc bias in magnetizing current almost is inevitable. If the transformer volt-second balance is not restored, then the offset in the flux-density swing

EFFICIENT, RUGGED P-CHANNEL

HIGH-SIDE SWITCHING - GREATER FBSOA

P-Channel High-side Switching

Part Number	Vdss (max)	Id@Tc=25°C	Rds(on)	Qg(typ)	Package
PolarP™ P-Channel Power MOSFETs					
IXTA32P05T	-50V	-32A	0.036Ω	46nC	TO-263
IXTP28P065T	-65V	-28A	0.045Ω	46nC	TO-220
IXTA24P085T	-85V	-24A	0.065Ω	41nC	TO-263
IXTP18P10T	-100V	-18A	0.120Ω	39nC	TO-220
IXTA44P15T	-150V	-44A	0.065Ω	175nC	TO-263
TrenchP™ P-Channel Power MOSFETs					
IXTA52P10P	-100V	-52A	0.050Ω	60nC	TO-263
IXTP36P15P	-150V	-36A	0.110Ω	55nC	TO-220
IXTH48P20P	-200V	-48A	0.085Ω	103nC	TO-247
IXTA10P50P	-500V	-10A	1.000Ω	50nC	TO-263
IXTH16P60P	-600V	-16A	0.720Ω	92nC	TO-247

More parts not listed

TrenchP™ Applications
- High side switching
- DC/DC converters
- High current regulators
- DC choppers
- CMOS high power amplifiers
- Push-pull amplifiers
- Power solid state relays
- Battery chargers
- Audio applications
- Medical applications

PolarP™ Applications
- Pull-pull amplifiers
- Buck converters
- DC choppers
- Power solid state relays
- CMOS high power amplifiers
- High current regulators
- High switching in automotive and test equipments

IXYSPOWER
Efficiency Through Technology

For more information, call the Marketing Dept. at (408) 457-9004
www.ixyspower.com

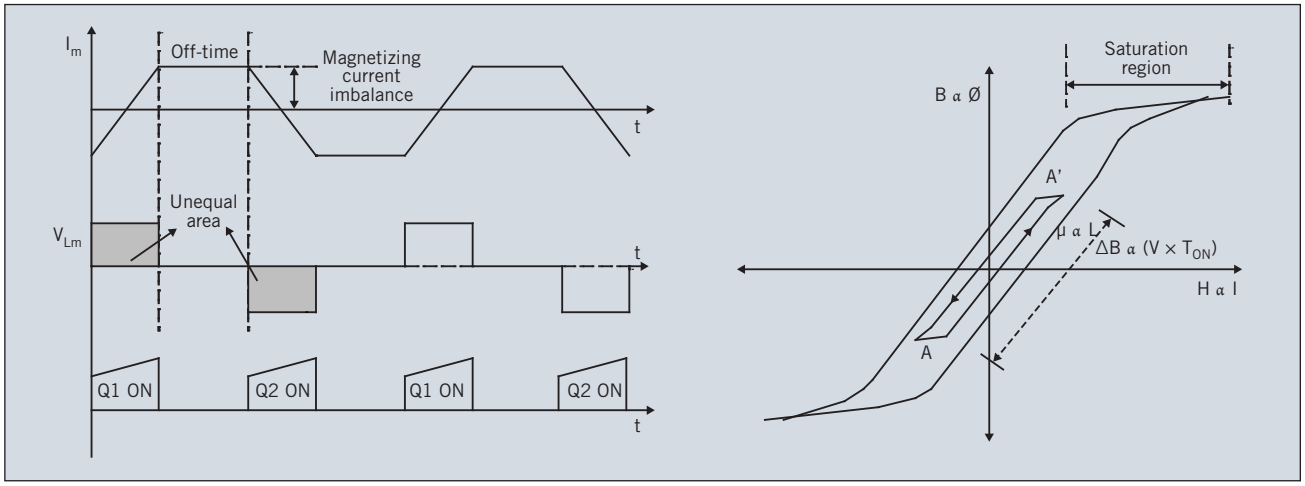

Fig. 3. Asymmetrical flux-density swing. Output voltage shows a magnetizing current imbalance. The B-H curve shows that operation is within the safe-operating region.

will increase with each subsequent cycle, and the transformer core will slowly creep toward saturation region of the B-H curve. This results in rapidly increasing primary current as the magnetizing inductance becomes near zero, leading to a catastrophic failure of the converter.

In current-mode control, primary current is compared against an error signal to control the duty cycle. In steady-state, this results in the cycle being terminated at equal peak primary currents in both of the phases, thus maintaining equal volt-second products in both of the phases. As shown in Fig. 1, the primary current consists of two components: magnetizing current and load current reflected to the primary. The primary current is not directly proportional to the magnetizing current, so there is a possibility of a slight imbalance. Typically, this imbalance is innocuous, as the peak operating flux-density (B_{peak}) is set much lower than the saturating flux-density (B_{sat}) of the transformer.

In voltage-mode control, the output voltage error signal is compared against either a feed-forward ramp or an artificial ramp to control the duty cycle. The magnetizing current

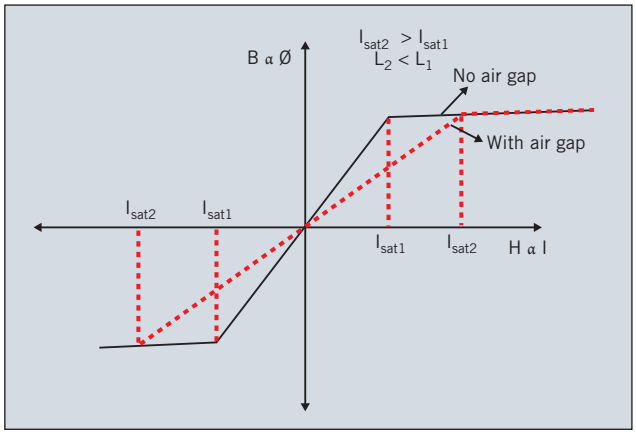

Fig. 4. The dashed line shows the effect of the addition of an air gap, which causes the transformer core to decrease its magnetizing inductance, resulting in increased peak currents and hence reduced efficiency.

information is not used. Thus, voltage-mode control cannot inherently restore any volt-second imbalance. Hence, to avoid the transformer saturation, there is a need for negative feedback that can compensate for any inherent volt-second imbalance.

WHY VOLTAGE-MODE PUSH-PULL CONVERTER?

If current-mode control solves the saturation problem, then why bother with the voltage-mode control of push-pull topology? Why not consider other double-ended topologies? Or, if push-pull topology is desired, why not just use current-mode? The answer is simple: There is a niche market for a voltage-mode controlled push-pull converter. For instance, in automotive areas, the input voltage for functions that need to perform during vehicle "start-and-go" phase varies from 6 V to 15 V. The battery voltage dips low during cold-cranking, and several automotive power-supply manufacturers test the startup functions at voltages as low as 6 V. This makes half-bridge/full-bridge with high-side gate-driver unattractive. Push-pull topology with two low-side switches is best suited for low input voltage applications. Furthermore, the load current can go as low as 0 A in automotive applications. When the load current is near 0 A, the error signal does not have significant PWM ramp amplitude to modulate against, which makes the control susceptible to noise. In addition, the PWM pulses can be quite erratic. To avoid this phenomenon, an artificial ramp generally is added to increase the magnitude of the PWM ramp. On one hand, this can potentially stabilize the PWM operation. On the other hand, it complicates the control and leads to the following issues:

- *At no-load and near no-load conditions, with an artificial ramp, the PWM control is more voltage mode than current mode. It can render the original Type II compensation inadequate and make the converter oscillate.*
- *This artificial ramp for duty cycles greater than 50% acts as slope compensation and is a positive force; however, at low duty cycles, it again renders the control more voltage mode than control mode*

and creates the same problems mentioned previously.

The aforementioned scenario is just one example. In general, a voltage-mode controlled push-pull converter is an attractive solution for any application that needs to operate at low input voltages and with wide output load swings.

DESIGNING A STABLE VOLTAGE-MODE PUSH-PULL CONVERTER

As discussed earlier, in a voltage-mode push-pull converter, volt-second imbalance from one phase to another phase is unavoidable. However, by following deliberate choices, a stable voltage-mode push-pull converter can be designed.

Gapping the transformer core increases the reluctance (i.e., magnetic resistance). Permeability (μ) of a magnetic core is inversely proportional to the reluctance. Thus, gapping the core decreases the slope of the hysteresis curve and pushes the onset of saturation further away (*Fig. 4*). In other words, it increases the dc current-handling capability of the transformer. This will help the scenario shown in Fig. 3, where small amounts of volt-second imbalance results in a dc-offset in the magnetizing current. Gapping the core also is an excellent way to control magnetic-to-magnetic variations in mass production. Without any air gap, the inductance is directly proportional to the core permeability. However, the core permeability is dependent on temperature and material characteristics, which varies from lot to lot. Therefore, the addition of an air gap reduces the magnetizing inductance dependence on μ and results in a more stable and repeatable magnetic.

As seen in Fig. 4, gapping the core decreases the magnetizing inductance, resulting in increased peak currents and hence reduced efficiency. However, in most cases, the effect on efficiency is not substantial.

The volt-seconds applied to the transformer primary in a push-pull topology, as shown in Fig. 1, is:

$$\{V_{IN} - I_m \times (R_{DS(ON)} + DCR)\} \times T_{ON} \quad (1)$$

Assuming that in one of the phases the switch is on longer by a Δt, the new magnetizing current is:

$$I_{m(new)} = \frac{V \times (T + \Delta t)}{L_m} \quad (2)$$

Or,

$$I_{m(new)} = I_m + \Delta I_m \quad (3)$$

This increase in current causes excessive power dissipation in the MOSFET. The $R_{DS(ON)}$ of the MOSFET has a

RUGGED IGBTs FOR SWITCHING POWER

GenX3™ 600V IGBT

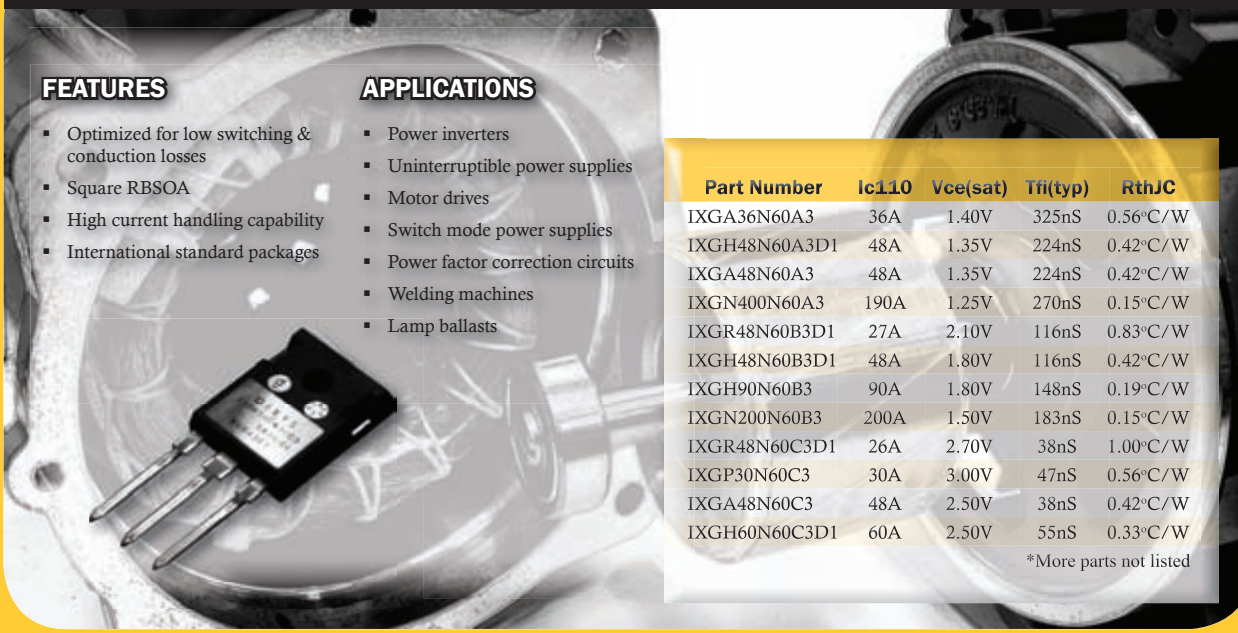

FEATURES

- Optimized for low switching & conduction losses
- Square RBSOA
- High current handling capability
- International standard packages

APPLICATIONS

- Power inverters
- Uninterruptible power supplies
- Motor drives
- Switch mode power supplies
- Power factor correction circuits
- Welding machines
- Lamp ballasts

Part Number	Ic110	Vce(sat)	Tfi(typ)	RthJC
IXGA36N60A3	36A	1.40V	325nS	0.56°C/W
IXGH48N60A3D1	48A	1.35V	224nS	0.42°C/W
IXGA48N60A3	48A	1.35V	224nS	0.42°C/W
IXGN400N60A3	190A	1.25V	270nS	0.15°C/W
IXGR48N60B3D1	27A	2.10V	116nS	0.83°C/W
IXGH48N60B3D1	48A	1.80V	116nS	0.42°C/W
IXGH90N60B3	90A	1.80V	148nS	0.19°C/W
IXGN200N60B3	200A	1.50V	183nS	0.15°C/W
IXGR48N60C3D1	26A	2.70V	38nS	1.00°C/W
IXGP30N60C3	30A	3.00V	47nS	0.56°C/W
IXGA48N60C3	48A	2.50V	38nS	0.42°C/W
IXGH60N60C3D1	60A	2.50V	55nS	0.33°C/W

*More parts not listed

IXYSPOWER
Efficiency Through Technology

For general info, call the Marketing Dept. at

(408) 457-9004

positive temperature coefficient; hence, the $R_{DS(ON)}$ also is increased. Therefore, the new volt-seconds applied to the transformer is:

$$\{V_{IN} - (I_{m+\Delta} I_m) \times (R_{DS(ON)}) + DCR)\} \times (T_{ON} + \Delta t) \quad (4)$$

(See Eq. 5, below)

The increase in the voltage drop due to increased $R_{DS(ON)}$ and magnetizing current reduces the voltage applied to the transformer. Reduction in the voltage drop compensates for the longer on-time, thereby providing negative feedback. Thus, volt-second balance is restored within a few switching cycles. This leads to a stable converter that works within the safe operating region of the B-H curve, although with a slight dc-offset. Fig. 3 is an example of waveforms when the flux-density swing is asymmetrical yet within the safe operating area. An unbalanced flux-density swing will result in a magnetizing current with a dc-offset. This then results in unequal primary peak currents, which is fine as long as the flux-density is within the linear region of the B-H curve.

For the same reasons mentioned previously, adding a ballasting resistance in each leg is a crude way to provide additional negative feedback. However, this can significantly affect the efficiency of the converter.

Under steady-state conditions in a push-pull converter, the flux-density swings on the B-H curve from 1st quadrant to 3rd quadrant or vice-versa. However, during startup and under certain transient conditions, the flux-density can start from the origin. If it swings the same ΔB as during steady-state conditions, then the transformer might swing into the saturation region, resulting in a catastrophic failure of the converter. This phenomenon is known as flux doubling. To avoid this, soft-start the converter and employ a cycle-by-cycle current limit, which will terminate the cycle and restart the converter in a transient condition.

EXAMPLE

To test the theory, a voltage-mode push-pull converter was built. *Fig. 5* shows a 50-W push-pull converter with an input voltage range of 16 Vdc to 32 Vdc and an output voltage of 5 V with a current capability of 10 A. An LM25037 — a dual-mode PWM controller with alternating outputs — was selected. The LM25037 is compatible for both voltage-mode and current-mode control and operates from an ultrawide range of 5.5 V to 75 V. In addition to two balanced alternating outputs, the IC offers a dedicated current-sense and soft-start function, which (as explained earlier) is essential to avoid flux doubling in a voltage-mode push-pull converter.

A planar transformer with low magnetizing inductance and low DCR was selected, because planar transformers have a better coupling coefficient and offer lower leakage inductance compared to wound transformers. The nominal magnetizing inductance of the transformer is 100 uH. Low magnetizing inductance was deliberately chosen to increase the magnetizing current, which makes the negative feedback more effective. The dc-handling capability of the

$$[V_{IN} - \{I_m \times (R_{DS(ON)}) + DCR)\} - \{\Delta I_m \times (R_{DS(ON)} + DCR + \Delta R_{DS(ON)}) + I_m \times \Delta R_{DS(ON)}\}] \times (T_{ON} + \Delta t) \quad (5)$$

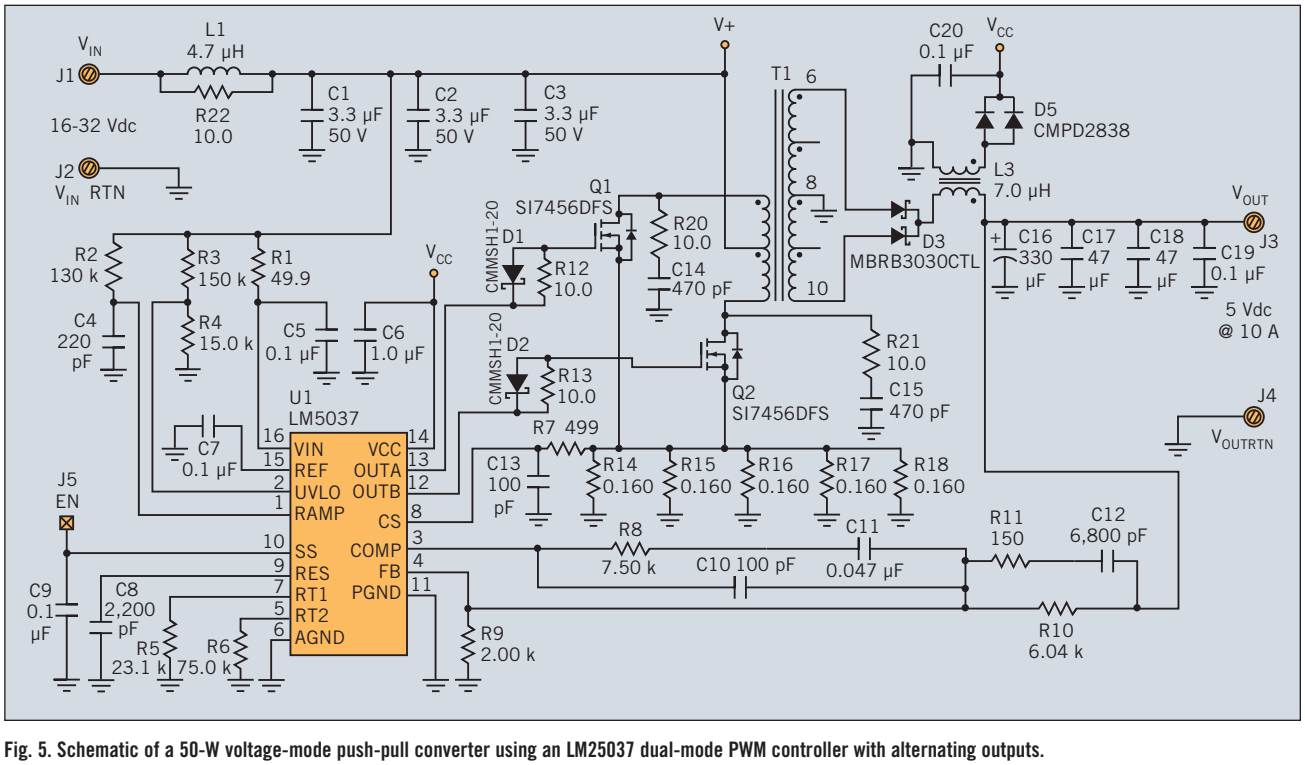

Fig. 5. Schematic of a 50-W voltage-mode push-pull converter using an LM25037 dual-mode PWM controller with alternating outputs.

transformer also was tested by passing a dc current through the primary and measuring the magnetizing inductance. The dc current at which the magnetizing inductance drops by 20% was identified as the maximum dc current capability of the transformer. This point was set much higher than the anticipated dc current in the transformer due to imbalance. This is an iterative process and, by gapping the transformer core, dc-handling capability of the transformer can be increased. The converter was tested at both hot and cold ambient temperature and was found to be stable. *Fig. 6* was captured to illustrate practically that an unbalanced magnetizing current is fine as long as the transformer is operating in the linear region of the B-H curve.

Monte Carlo simulation is recommended for mass production to ensure the minimum dc current-handling capability of the transformer is always greater than the maximum dc offset in the magnetizing current in the transformer due to imbalance. Introducing a resistor in one of the phases in the primary or in series with one of the secondary diodes is the best way to check for the design margin during the development process. One quick way to confirm if the transformer is saturating is to look for the presence of any non-linearity in the primary currents. A concave-shaped primary current waveform indicates the transformer is near saturation. ⏻

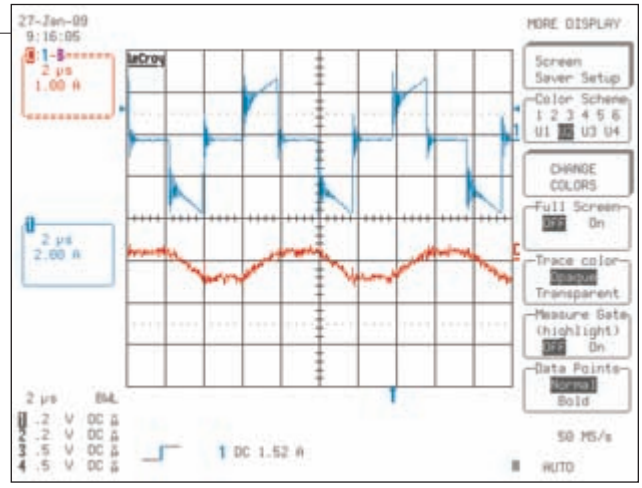

Fig. 6. Stable voltage-mode push-pull converter with a small dc-offset in magnetizing current. Top trace: primary current waveform. Bottom trace: magnetizing current waveform.

REFERENCES

1. *LM25037 Dual-Mode PWM Controller with Alternating Outputs*, www.national.com/LM25037.
2. Billings, K. "Switch-Mode Power Supply Handbook," McGraw-Hill, 1989.
3. Eriksson, R. and Maksimovic, D. "Fundamentals of Power Electronics," Springer, 2001.