Application Report
SLAA602 – June 2013

800VA Pure Sine Wave Inverter's Reference Design

Sanjay Dixit, Ambreesh Tripathi, Vikas Chola *High Performance Isolated Power*

ABSTRACT

This application note describes the design principles and the circuit operation of the 800VA pure Sine Wave Inverter.

The pure Sine Wave inverter has various applications because of its key advantages such as operation with very low harmonic distortion and clean power like utility-supplied electricity, reduction in audible and electrical noise in Fans, fluorescent lights and so on, faster, quieter and cooler running of Inductive loads like microwaves and motors.

Contents

1 Introduction 3
2 Pure Sine Wave Inverter's Design 4

Figures

Figure 1. Types of Inverter Outputs 3
Figure 2. Block Diagram of 600VA to 3 KVA Residential Pure Sine Wave inverters 4
Figure 3. Inverter Mode Gate Drives 6
Figure 4. H Bridge Configuration of MOSFETs 7
Figure 5. Modulation of Sine Wave with Higher frequency PWM signals 8
Figure 6. Waveform Generation in Inverter Mode 8
Figure 7. Trilevel PWM signal during the Inverter Mode for Pure Sine Wave Generation 9
Figure 8. Charging Mode PWM Switching Explanation. 10
Figure 9. DC/DC Converter's Design 14
Figure 10. Gate Driver and Current Sensing 16
Figure 11. ODC and OCC Protection 17
Figure 12. AC Mains Sensing through Isolated Amplifier 18
Figure 13. Relay Operation 18
Figure 14. Output Sense, DC Fan and Buzzer operations 19
Figure 15. Daughter Card's Schematic 21
Figure 16. Waveforms at the Gates of the MOSFETs in Inverter Mode (High Side A MOSFETs and B Side Low MOSFETs are conducting). 25
Figure 17. FIG 17: Waveforms at the Gates of the MOSFETs in Inverter Mode (High Side B MOSFETs and A Side Low MOSFETs are conducting). 26
Figure 18. Trilevel Switching across the High Side A MOSFETS Source (HSA) and High Side B MOSFETs Source (HSB). 27
Figure 19. Trilevel Switching across the High Side A MOSFETS Source (HSA) and High Side B MOSFETs Source (HSB). 28
Figure 20. Inverted Waveform (HOA-LOA and HOB-LOB) at the Gates of MOSFETS 29
Figure 21. Dead Band between Complementary HOB and LOB Pair. 29

Figure 22. Maximum duty cycle of the PWM Switching at No Load (at the Inverter's Output) is 88 percent 30
Figure 23. Maximum duty cycle of the PWM switching at 400W (at the Inverter's Output) is increased to 98 percent to maintain Voltage regulation at the Inverter's output by sensing the Auxiliary Winding. This results in slight clipping of Sinusoidal waveform at the output. 30
Figure 24. Inverter's Output at No Load with 12V battery Input: 31
Figure 25. Inverter's Output at 400W Load with 12V battery Input: 31
Figure 26. Waveform during the Charging mode. The high side FET is switched off and both Lower Side FETs to ground in the H Bridge are switched at the same time with the duty Cycle proportional to the Battery Charge current. 32

1 Introduction

Power inverter is a device that converts electrical power from DC form to AC form using electronic circuits. It is typical application is to convert battery voltage into conventional household AC voltage allowing you to use electronic devices when an AC power is not available. There are basically three kinds of Inverter out of which, the first set of inverters made, which are now obsolete, produced a Square Wave signal at the output.

The Modified Square Wave also known as the Modified Sine Wave Inverter produces square waves with some dead spots between positive and negative half-cycles at the output. The cleanest Utility supply like Power source is provided by Pure Sine Wave inverters. The present Inverter market is going through a shift from traditional Modified Sine Wave Inverter to Pure Sine Wave inverters because of the benefits that these inverters offer.

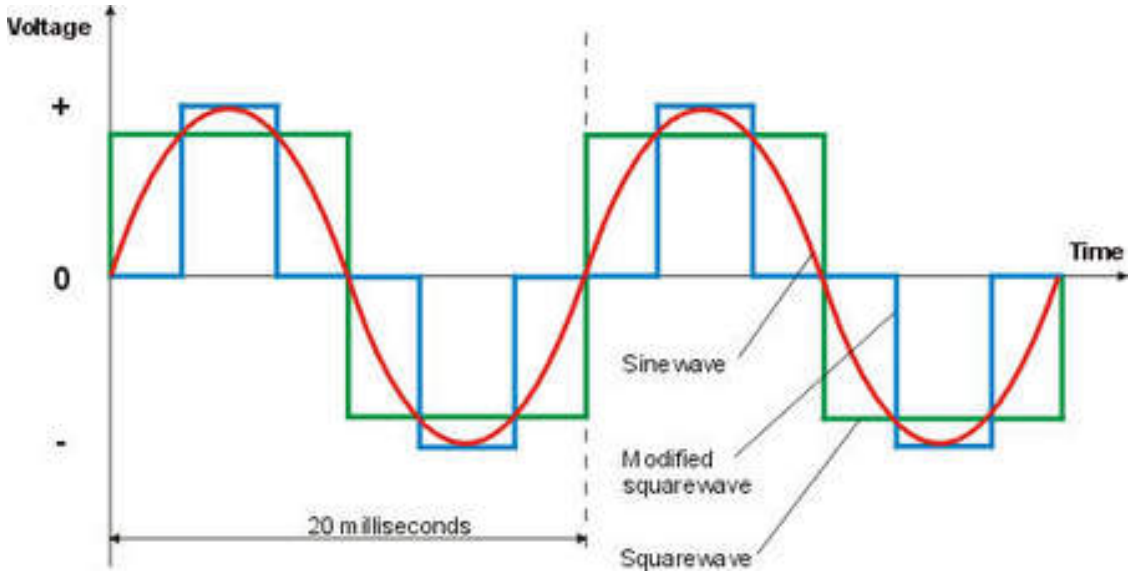

Figure 1. Types of Inverter Outputs

2 Pure Sine Wave Inverter's Design

a) Building Block

.

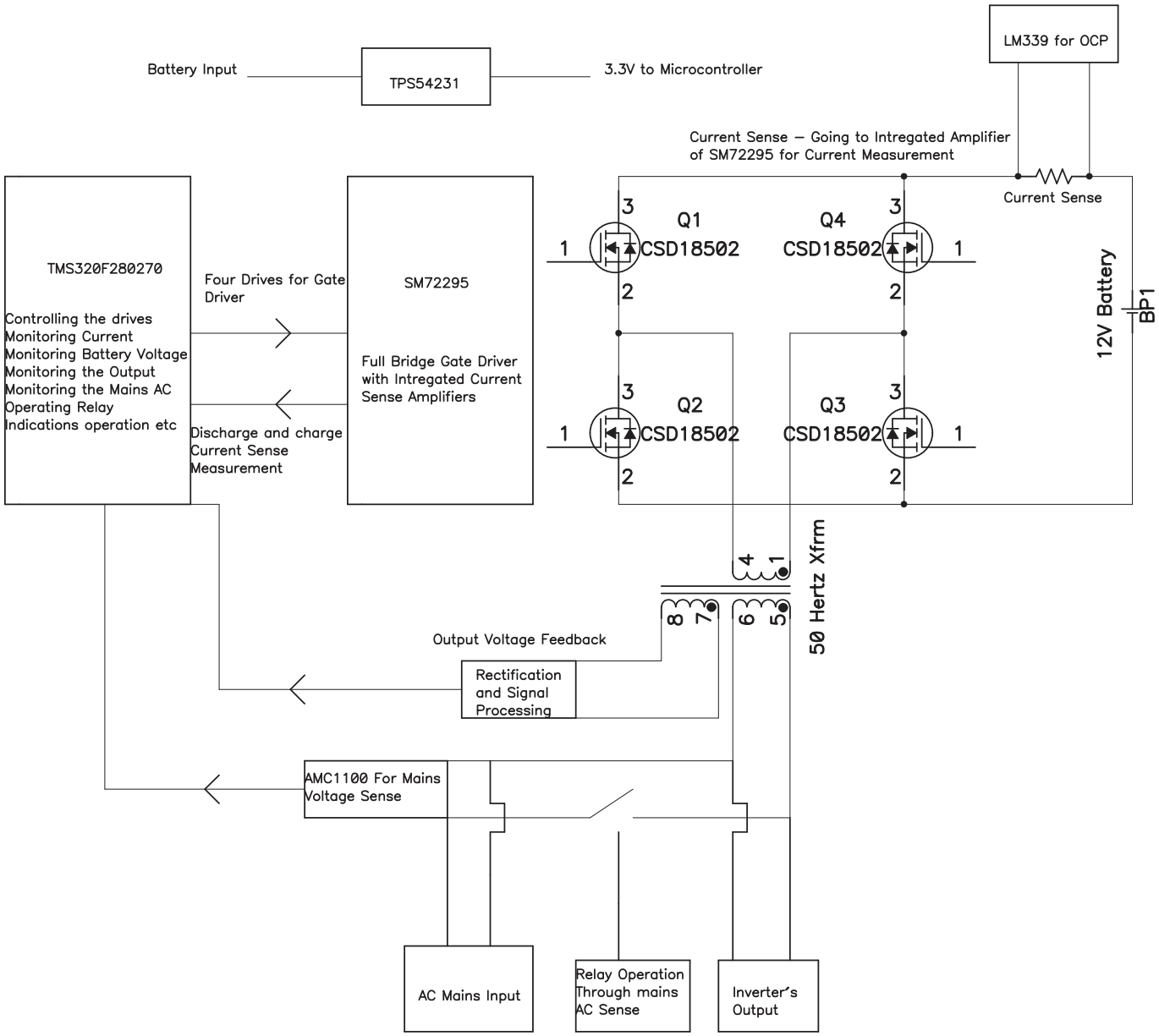

Figure 2. Block Diagram of 600VA to 3 KVA Residential Pure Sine Wave inverters

There is a dual mode of operation in a residential Inverter, ie Mains mode and Inverter modes shown in Figure 2.

An Inverter not only converts the DC Voltage of battery to 220V/120 V AC Signals but also charge the Battery when the AC mains is present. The block diagram shown above is a simple depiction of the way an Inverter Works.

Inverter Mode:

The method, in which the low voltage DC power is inverted, is completed in two steps. The first step is the conversion of the low voltage DC power to a high voltage DC source, and the second step is the conversion of the high DC source to an AC waveform using pulse width modulation. Another method to complete the desired outcome would be to first convert the low voltage DC power to AC, and then use a transformer to boost the voltage to 120/220 volts. The widely used method in the current residential inverter is the second one and hence this reference design is based on this method.

The AC input is sensed through isolated amplifier (AMC1100) and the isolated replica of the AC input is given to the TI's Picolo Lite Microcontroller ADC. When the AC input is not present in Valid range (Inverter mode) or AC fails , the relay between Mains AC Input and the Inverter Output remain open, the microcontroller generates PWMs and send four drives output to Gate Driver (SM72295) . Now the Gate Driver accepts low-power inputs from the controller and produces the appropriate high-current gate drive for the power MOSFETs placed in Full Bridge Topology.

Here H-bridge circuit converts battery DC voltage into AC using high frequency PWM (6 kHz to 20 KHz) thus feeding the 50 Hz transformer which Boost it to 120V/220V AC. The output of transformer contains a capacitor which filters it to make clean 50Hz AC.(Details of Switching can be found in the sections to come).

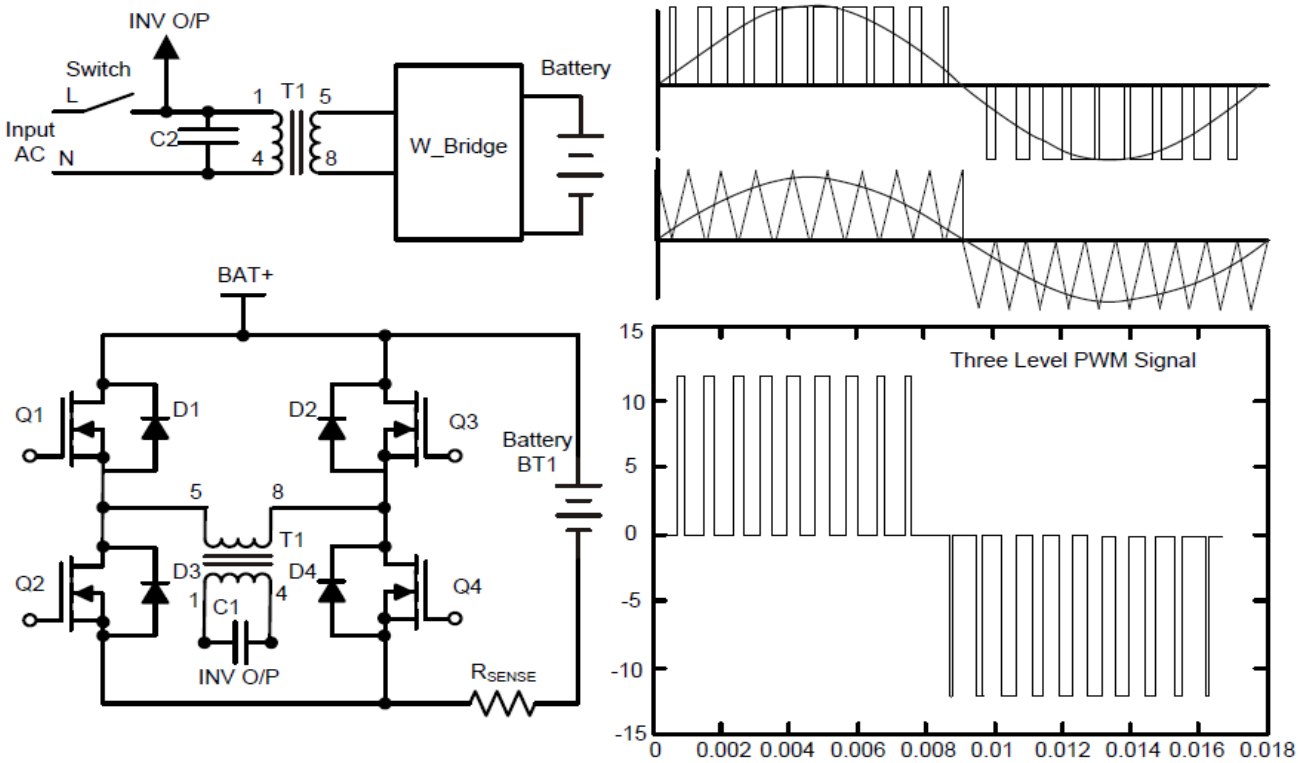

Figure 3. Inverter Mode Gate Drives

As seen from the Block Diagram (Fig 2), the Output Voltage is Sensed through the Auxiliary Secondary Winding and feeds to the Controller. The Controller takes this feedback and then Work on the PWM to generate the regulated AC output.

Furthermore the current that is flowing through the battery in Inverter mode and the Charging current during the Mains mode is measured using Integrated Amplifiers of SM72295 and given to the ADCs of the Microcontroller .

Also this reference design has additional protection for Over current Discharge (OCD) and Over Current Charge (OCC) using LM339 Comparators where the amplified Voltage output across Current sense is compared with a pre determined Value and the PWM is immediately shut down by the controller if either the OCD or OCC limit is crossed .

Main Mode:

In the mains mode, when the input AC is present and is within valid range, the relay between Input AC and the Inverter Output is closed and the input AC directly goes to the output load. The same AC is fed to transformer, and the H-bridge consisting of MOSFETs or IGBTs are driven through microcontroller to charge the battery. A bridge less rectification principle is used to charge the battery where basically both the high side FET is switched off and both Lower Side FETs to ground in the H Bridge are switched at the same time with the duty Cycle proportional to the Battery Charge current.

Whenever the Lower FETs are Turned ON at the same time, ie there is a Generation of Boosted Voltage across the Leakage inductance of the Primary inductance connected to H Bridge by the Ldi/dt effect and this energy stored in the Leakage Inductance flow through the body diode of the high Side MOSFETs (Each high side MOSFETs body diode conducts on AC half cycle) and charge the Battery. Hence the charging current is proportional to the duty cycle of the PWM switching on Lower Side FETs. (Details of switching follow in the section to come).

b) Switching Waveform Details:

In order to understand the functioning of an Inverter, One has to understand the Switching requirement of the four drives of the MOSFETs in H Bridge both in Inverter as well as Mains mode.

1) <u>Inverter Mode</u>

The Switching Wave Form in an Inverter is very simple to understand and generate.

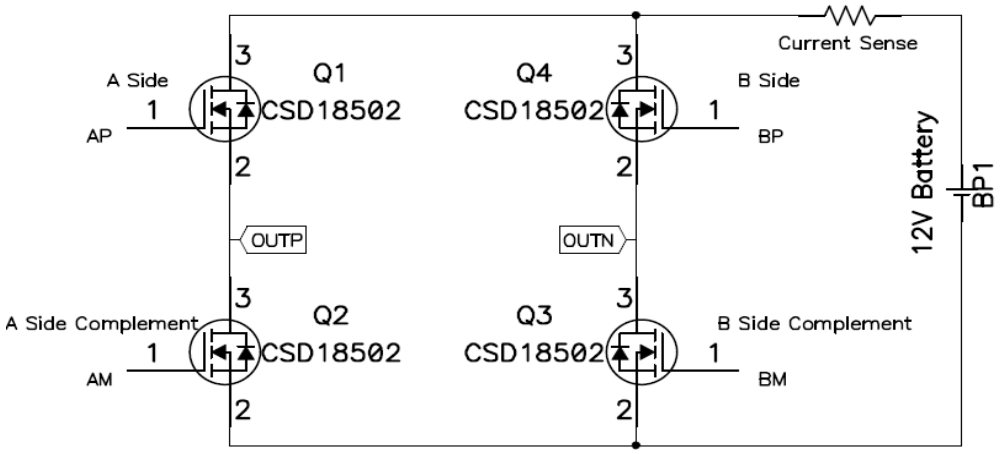

Figure 4. H Bridge Configuration of MOSFETs

On the **<u>A Side</u>** MOSFET of the H Bridge, the PWM is generated by modulating the Sine Wave with High Frequency (6 KHz to 20 KHz) Square wave in such a way that the Positive Peak of the Sine Wave is represented by Maximum duty cycle and the Negative Peak by the Minimum duty Cycle as Shown Below.

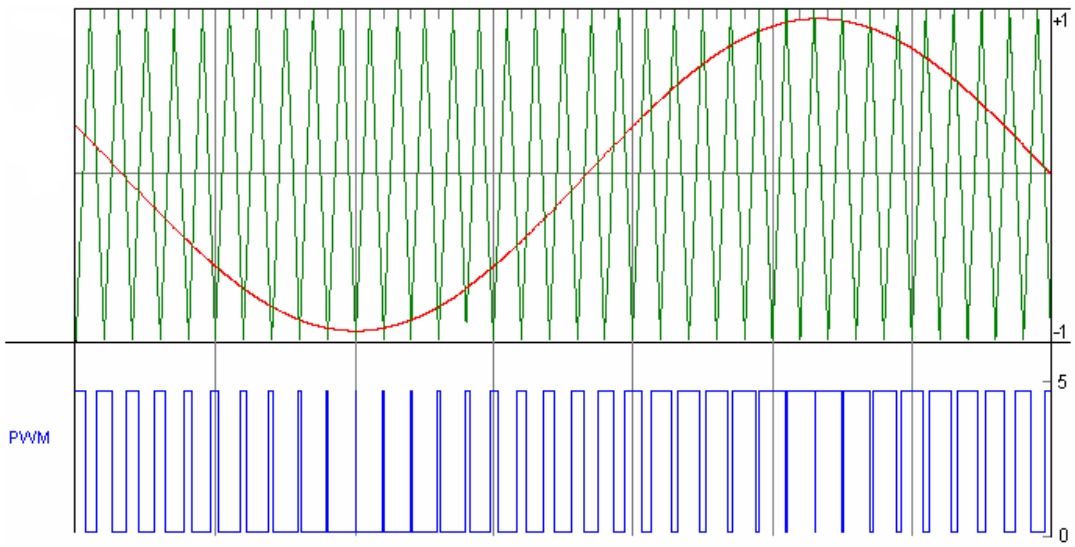

Figure 5. Modulation of Sine Wave with Higher frequency PWM signals

Now on the B Side , Just Phase Shift this Sine Wave by 180 degree and generate the PWM in a similar Way as mentioned above . The Following Simple Hardware Implementation of the PWM generation will make the design more clear.

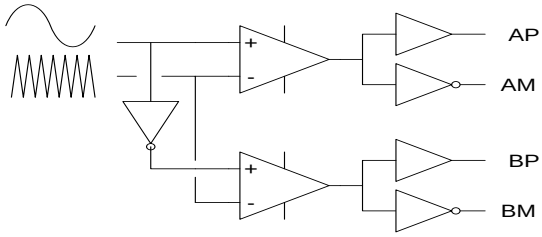

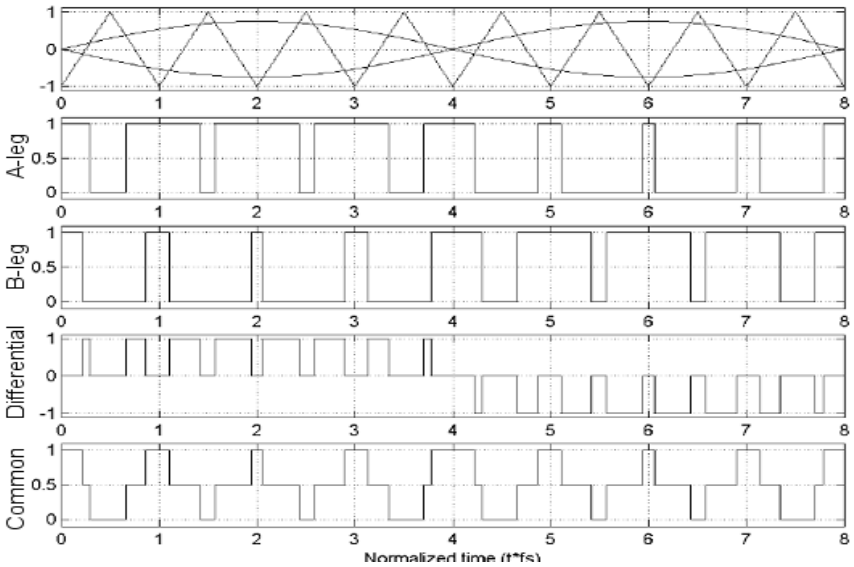

Figure 6. Waveform Generation in Inverter Mode

A Side Complementary or the AM signal is obtained by just Inverting the A side or AP Waveform and the same goes for **B Side Complementary or BM Waveform**

The Differential Signal seen across the OUTP and OUTN will be a Trilevel PWM Signal as mentioned Below:

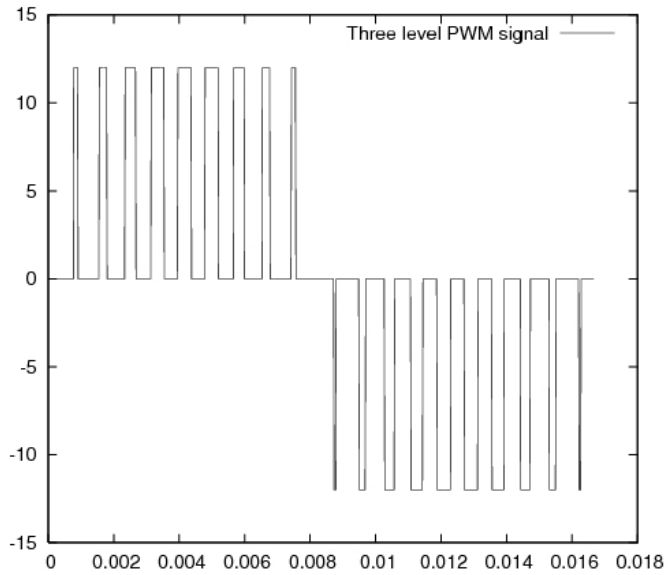

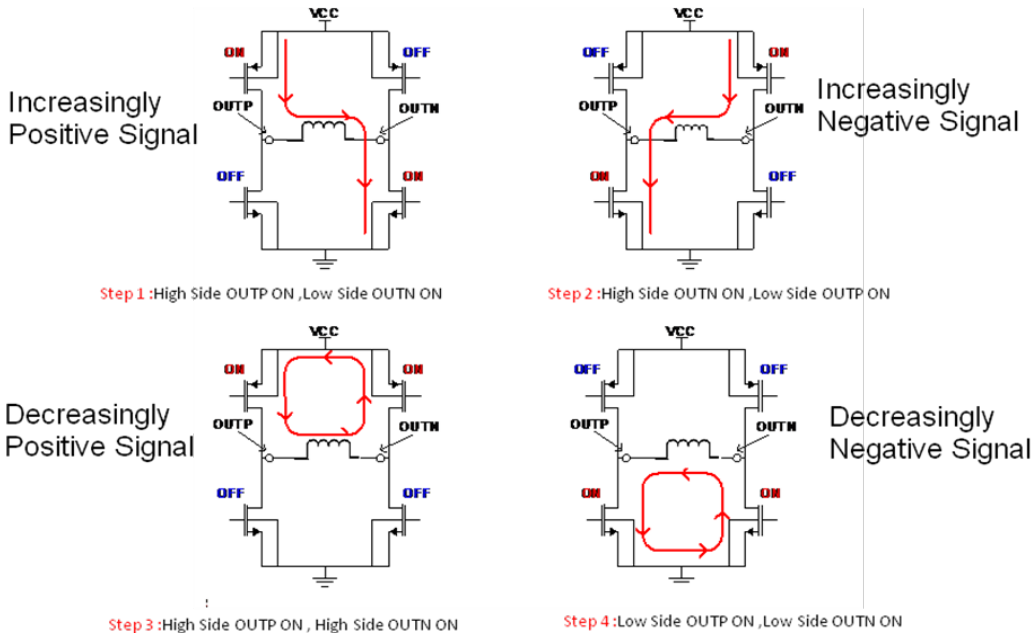

Figure 7. Trilevel PWM signal during the Inverter Mode for Pure Sine Wave Generation

2) Mains Mode:

In the Mains Mode both the High Side MOSFETs ie A side as well B side is Switched off and both the Low Side MOSFETs are Switched with the Similar PWM Waveform where the Duty Cycle of Lower Side PWM signals determine the Charging Current.

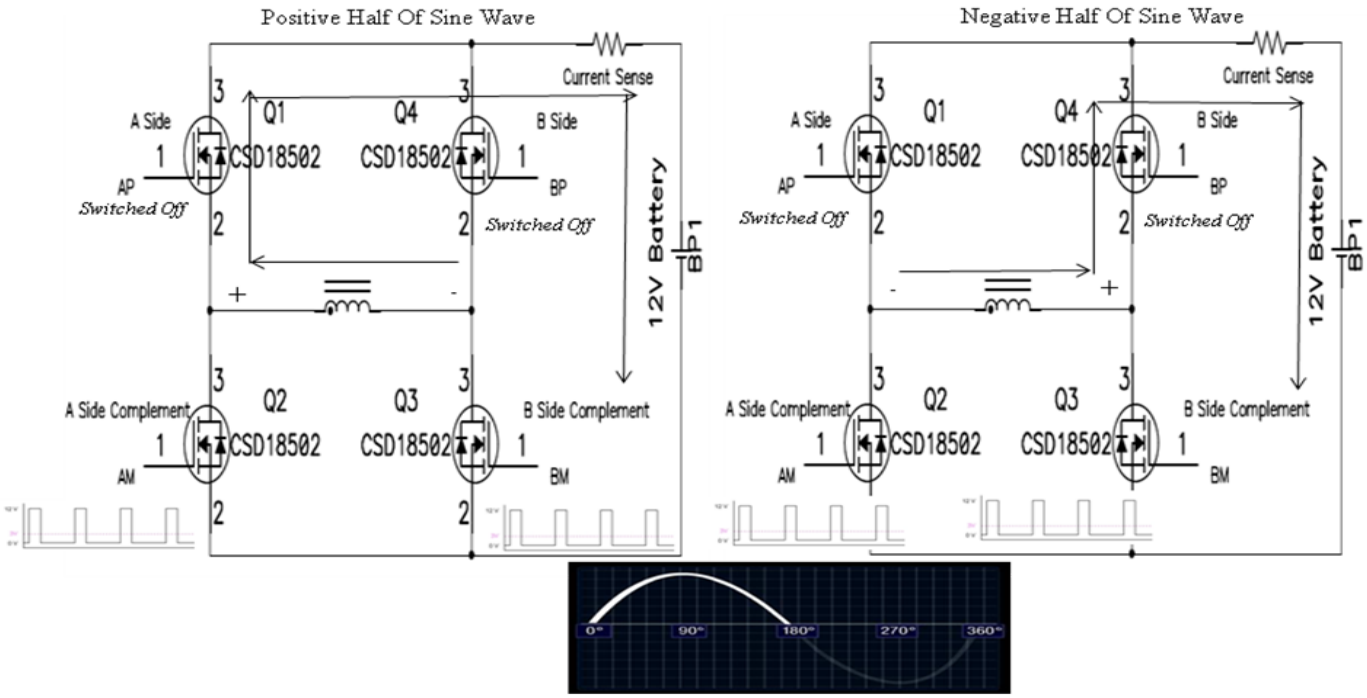

Figure 8. Charging Mode PWM Switching Explanation.

When the Lower Switches are Turned on at the same time, there is a Boosted Voltage , that appear across the Primary Leakage Inductance of Transformer connected to the H –Bridge , by the Ldi/dt effect and this energy is use to charge the Battery through the Body diodes of the High Side MOSFETs. Also each of the High Side MOSFET's Body diode will conduct in the each half of the Sine Wave.

When the mains mode is sensed, firstly all the MOSFETs are switched off and the Relay between the Ac input and the Inverter output is connected. After this, the Lower FETs are tuned on with PWM of small duty Cycle (5 to 10 percent) and the High Side MOSFETS are switched off .Now the Voltage across the current sense is measured by controller and if the corresponding current is less or more than required by Charging algorithm than the duty cycle is altered correspondingly ie duty cycle is increased if more Charging current is required and decreased if the charging current reduction is desired.

C) Schematic of the Design

The Schematic is divided into two boards:

1) Main Power's Board 2) Microcontroller's Daughter Card

Main Board's Schematic

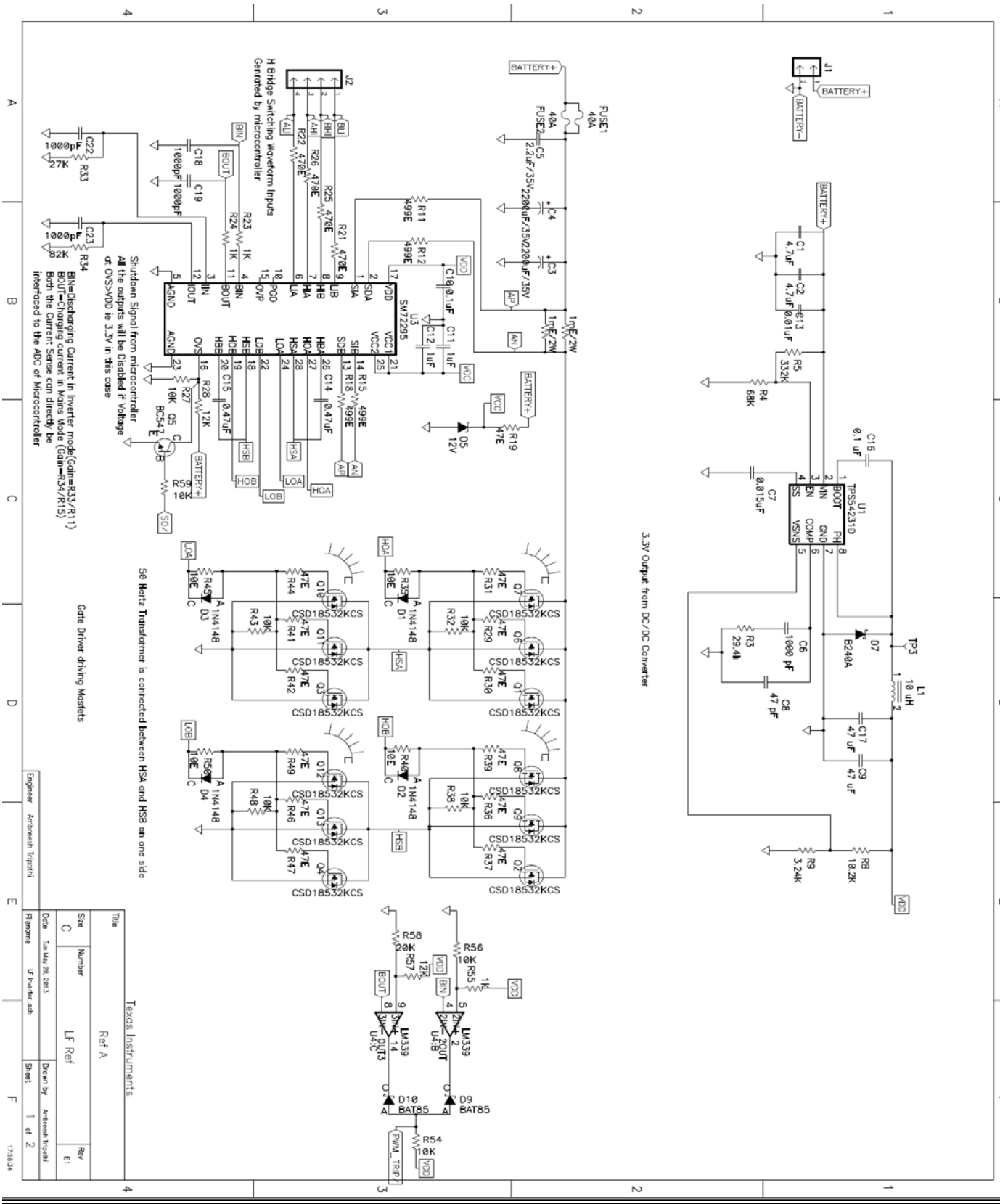
3.3V Output from DC/DC Converter
H Bridge Switching Waveform Inputs
Generated by microcontroller
Shutdown Signal from microcontroller
All the outputs will be Disabled if Voltage
at CVS>VDD ie 3.3V in this case
BIN=Discharging Current in Inverter mode(Gain=R33/R111)
BOUT=Charging current in Mains Mode (Gain=R34/R15)
Both the Current Sense can directly be
interfaced to the ADC of Microcontroller
50 Hertz Transformer is connected between HSA and HSB on one side
Gate Driver driving Mosfets
Texas Instruments
Ref A
LF Ref
Engineer Archeesh Tripathi
Date Tue May 28, 2013
Filename LF Inverter.sch
Drawn by Archeesh Tripathi
Sheet 1 of 2

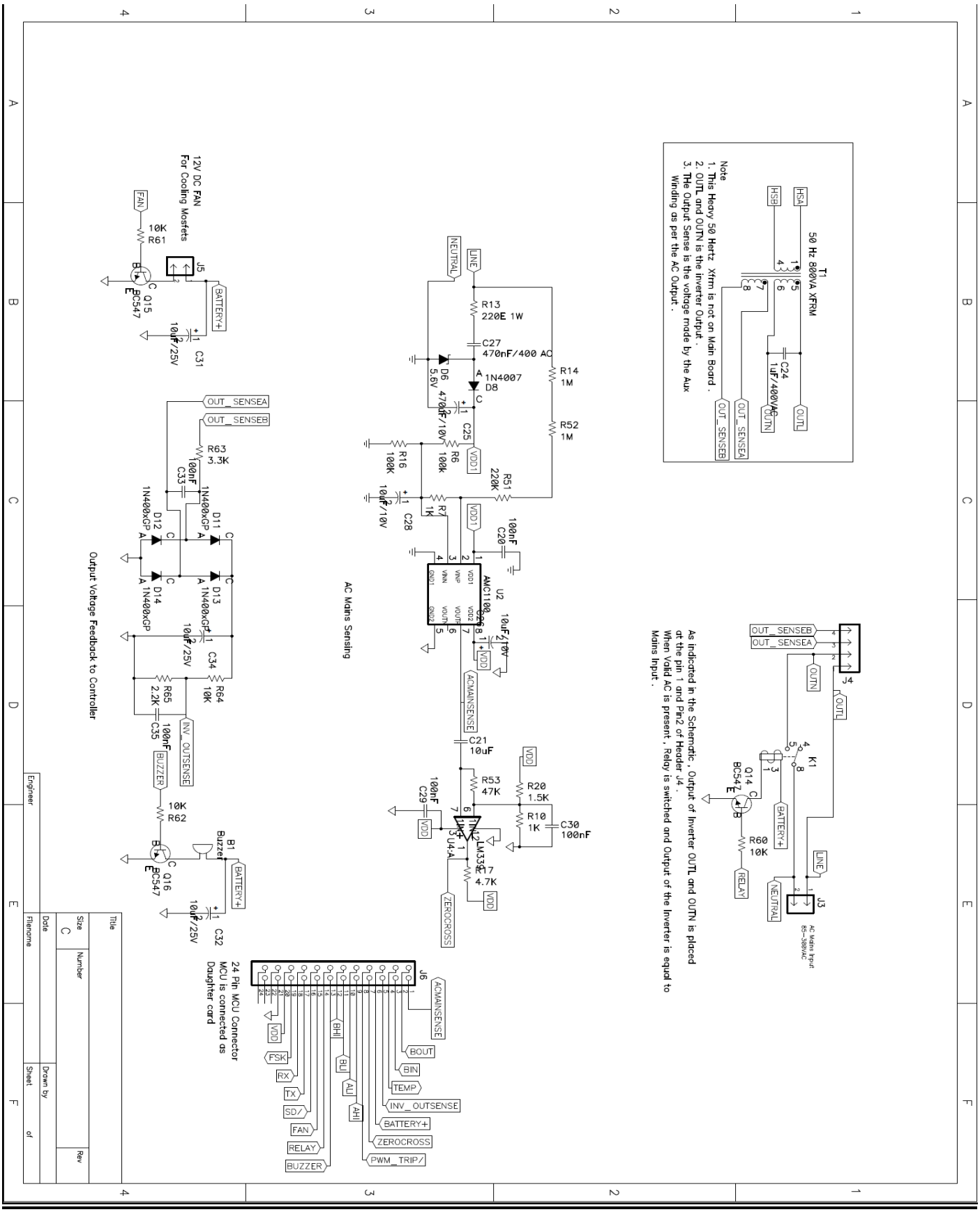
T1
50 Hz 800VA XFRM
HSA
HSB
C24
1uF/400VAC
OUTL
OUTN
OUT_SENSEA
OUT_SENSEB
Note
1. This Heavy 50 Hertz Xfrm is not on Main Board .
2. OUTL and OUTN is the inverter Output .
3. The Output Sense is the voltage made by the Aux Winding as per the AC Output .
J4
K1
Q14
BC547
R60
10K
RELAY
BATTERY+
LINE
NEUTRAL
J3
AC Mains Input
85~380VAC
As indicated in the Schematic, Output of Inverter OUTL and OUTN is placed at the pin 1 and Pin2 of Header J4 .
When Valid AC is present, Relay is switched and Output of the Inverter is equal to Mains Input .
AC Mains Sensing
R13
220E 1W
C27
470nF/400 AC
D6
5.6V
1N4007
D8
R14
1M
R52
1M
C25
470uF/10V
R6
100k
R16
100k
R51
220K
R7
1K
C28
10uF/10V
VDD1
C20
100nF
U2
AMC1100
10uF/10V
VDD
ACMAINSENSE
C21
10uF
R53
47K
R20
1.5K
R10
1K
C30
100nF
C29
100nF
U4:A
LM339
R17
4.7K
ZEROCROSS
12V DC FAN
For Cooling Mosfets
FAN
10K
R61
J5
Q15
BC547
C31
10uF/25V
Output Voltage Feedback to Controller
R63
3.3K
C33
100nF
D11
1N400xCP
D12
1N400xCP
D13
1N400xCP
D14
1N400xCP
C34
10uF/25V
R64
10K
R65
2.2K
C35
100nF
INV_OUTSENSE
BUZZER
10K
R62
Q16
BC547
B1
Buzzer
C32
10uF/25V
24 Pin MCU Connector
MCU is connected as Daughter card
J6
ACMAINSENSE
BOUT
BIN
TEMP
INV_OUTSENSE
BATTERY+
ZEROCROSS
PWM_TRIP/
BHI
BLI
ALI
AHI
VDD
FSK
RX
TX
SD/
FAN
RELAY
BUZZER
Title
Size
C
Number
Rev
Date
Drawn by
Filename
Sheet
of
Engineer

Microcontroller's Daughter Card

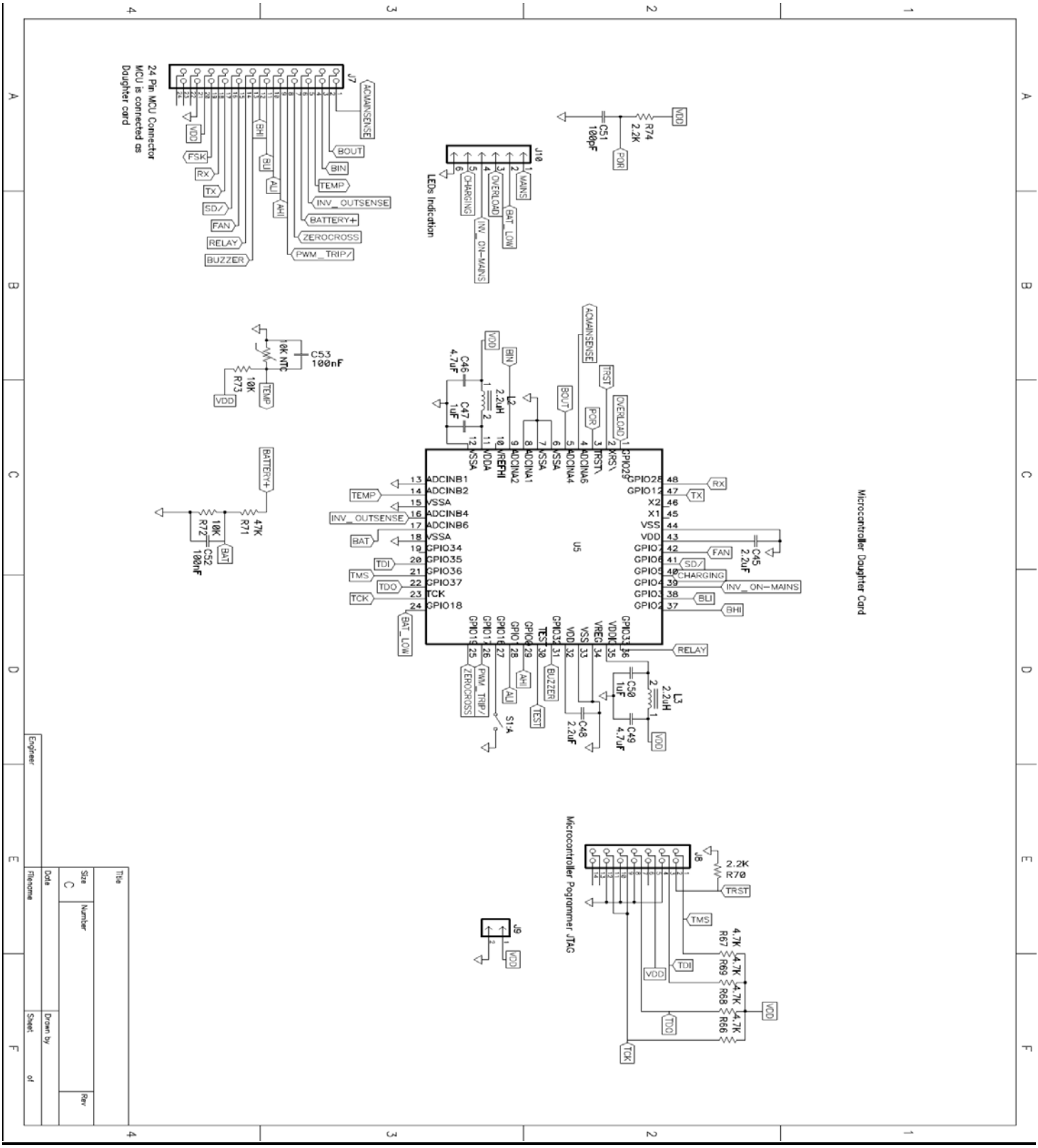

D) Sections of the Design:

1) 12V Battery Input to 3.3V Conversion:

TPS54231 Buck Converter is used to convert Battery Voltage (Nominal 12V) to 3.3V output which in turn is mainly used to power the Controller daughter card and AMC1100 Isolated amplifier Secondary side.

The TPS54231 dc/dc converter is designed to provide up to a 2 A (our requirement is of maximum 200mA) output from an input voltage source of 3.5 V to 28Vand this integrates a low RDSon high Side MOSFET. Further details to the IC can be found from the below links :

TPS54231: 3.5 to 28V Input, 2A, 570kHz Step-Down Converter with Eco-mode™
Product Folder: http://www.ti.com/product/tps54231
Datasheet (PDF): http://www.ti.com/litv/pdf/slus851c

Below is the design of DC/DC Section:

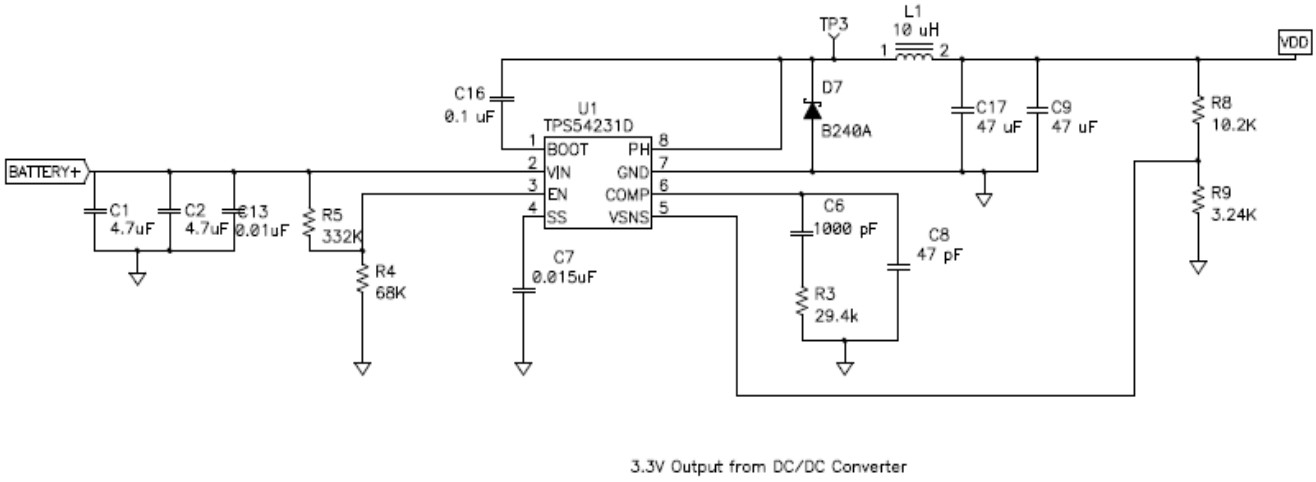

Figure 9. DC/DC Converter's Design

2) <u>Highly Integrated Gate Driver Design :</u>

Gate Driver is a power amplifier that accepts a low-power input from a controller IC and produces the appropriate high-current gate drive for a power MOSFET. The gate driver must source and sink current to establish required Vgs.

Here SM72295 is used as a full bridge MOSFET driver which has 3A (higher no. of FETs in parallel for high power) peak current drive capability and have following advantages:

1. Integrated ultra fast 100V boot strap diodes (can easily support up to 5KVA rated inverters)
2. Two high side current sense amplifiers with externally programmable gain and buffered outputs which can be used for measuring the Battery charge and discharge current – Additional current sense amplifiers and buffers are not required
3. Programmable over voltage protection – which can be used for Charge complete detection or for driver shutdown feature in case of a fault condition
4. Can be directly interfaced with a microcontroller

The Complete design principles and circuit details of SM72295 in the Inverter application can be found in below application notes (This also includes the current Sensing Sections of the Design)

AN-2296 SM72295: Highly Integrated Gate Driver for 800VA to 3KVA Inverter

http://www.ti.com/lit/an/snva678b/snva678b.pdf

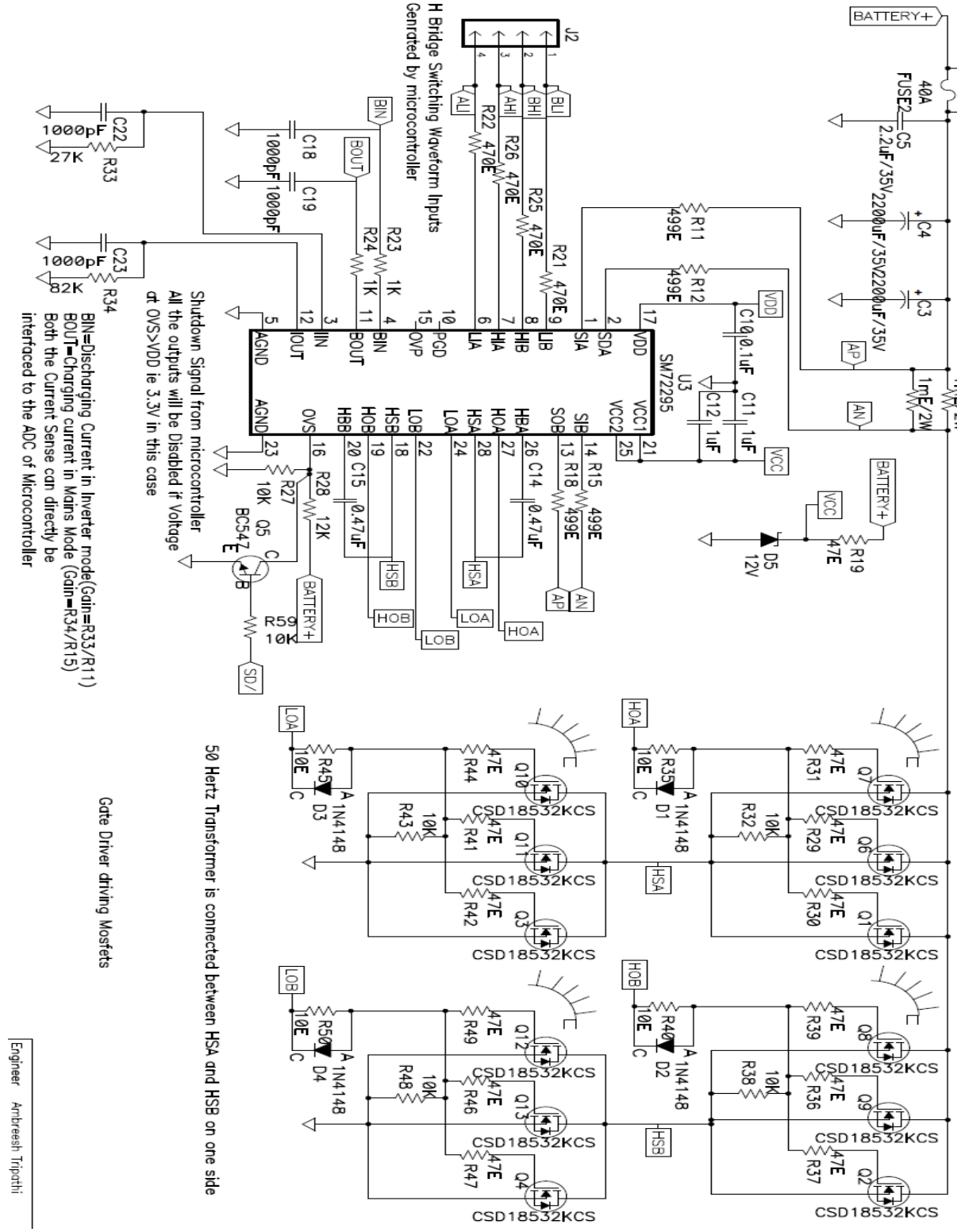

Figure 10. Gate Driver and Current Sensing

3) Over Discharge Current and Over Charge Current Protection Implementation:

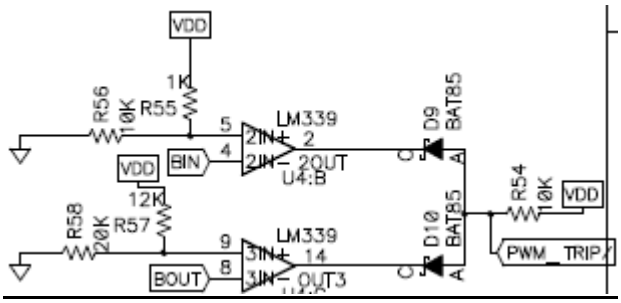

Figure 11. ODC and OCC Protection

Here BIN is the voltage Across the Current Sense resistance during the Inverter Mode and BOUT is the voltage across the Current Sense during the Mains mode. Now both of these is compared to the different reference voltages and the PWM is tripped once either BIN or BOUT exceed their given reference voltage.

Setting the reference point during the charging and discharging mode is very simple.

Now with the integrated amplifiers on the SM72295, the gain on the voltage across the current sense during the discharging mode is 27K/499E (Ratio of resistance on IIN and SIA pin of SM72295) and during the charging mode is 82K/499E.

To put the Over Discharge Current Protection (ODC) at current = 110A. The drop across the current sense will be current Sense resistance x ODC=0.055V .Now the gain of 27K/499 is given and hence the BIN = 3V approx. and hence the reference of 3V is given as ODC protection reference and similarly Over Charge Current Protection reference (of 25A) has been put as 2V.

4) Input AC Mains Sensing using Isolated Amplifier:

In the traditional design of Commercial 600 VA - 5 KVA inverters, the AC mains voltage is sensed by stepping down through a bulky 50 Hz transformer by the microcontroller which is powered up by battery through linear regulators. To ensure the operator safety (personal handling battery, and so on) and signal integrity, galvanic isolation is needed in the design.

The input AC Voltage Sensing is required in Inverters for changing to Mains mode through relay operation when A/C mains fall in the designated voltage level. Further comparators are also used in addition with transformer for location of zero crossing point of sinusoidal A/C signal.

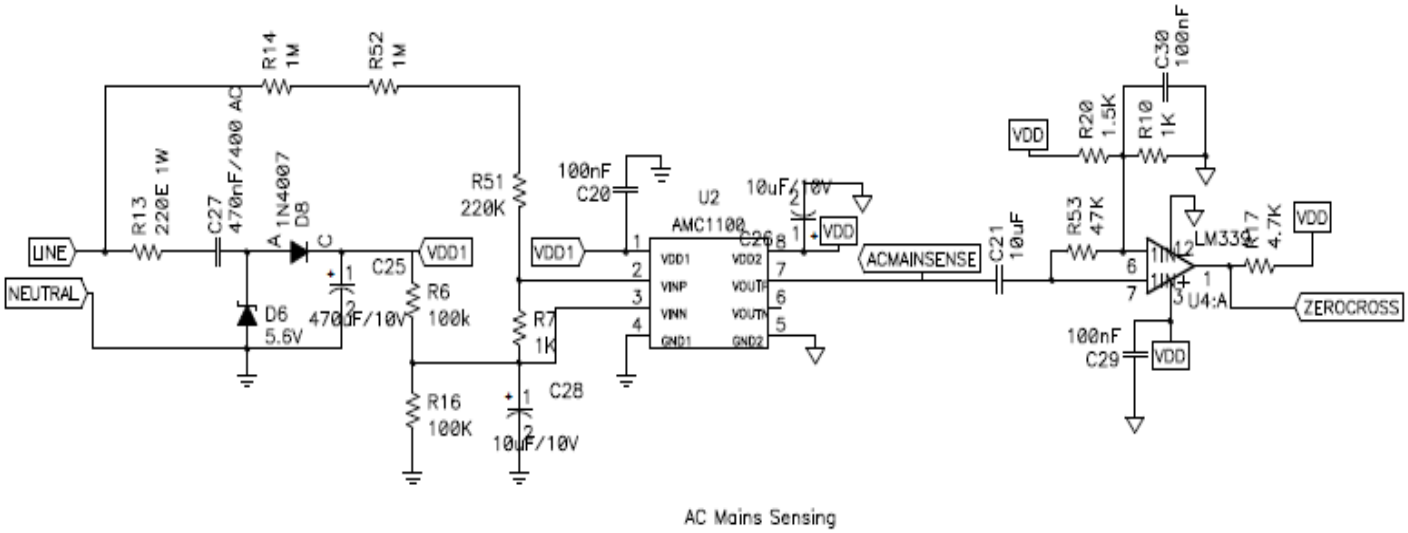

Figure 12. AC Mains Sensing through Isolated Amplifier

The Complete design principles and circuit details of Isolated Amplifier AMC1100 in the Inverter application can be found in below application notes:

<u>AMC1100: Replacement of Input Main Sensing Transformer in Inverters with Isolated Amplifier</u>

http://www.ti.com/lit/an/slaa552/slaa552.pdf

5) **<u>Relay Operation :</u>**

In the mains mode, when the input AC is present and is within valid range, the relay between Input AC and the Inverter Output is closed and the input AC directly goes to the output load. Basically one terminal of the Output (OUTL in this design) is shorted to the Line Input of the Mains and when the relay is turned on Neutral get connected to the OUTN and hence the AC input becomes the Inverters Output.

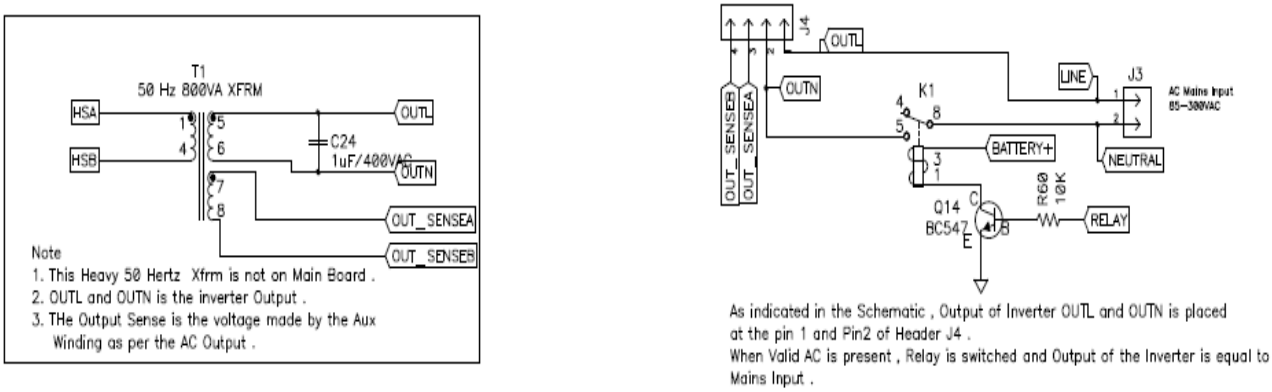

Figure 13. Relay Operation

6) Inverter's Output Voltage Sense in Inverter Mode, DC FAN operation for Cooling MOSFETs and Error Buzzer operation:

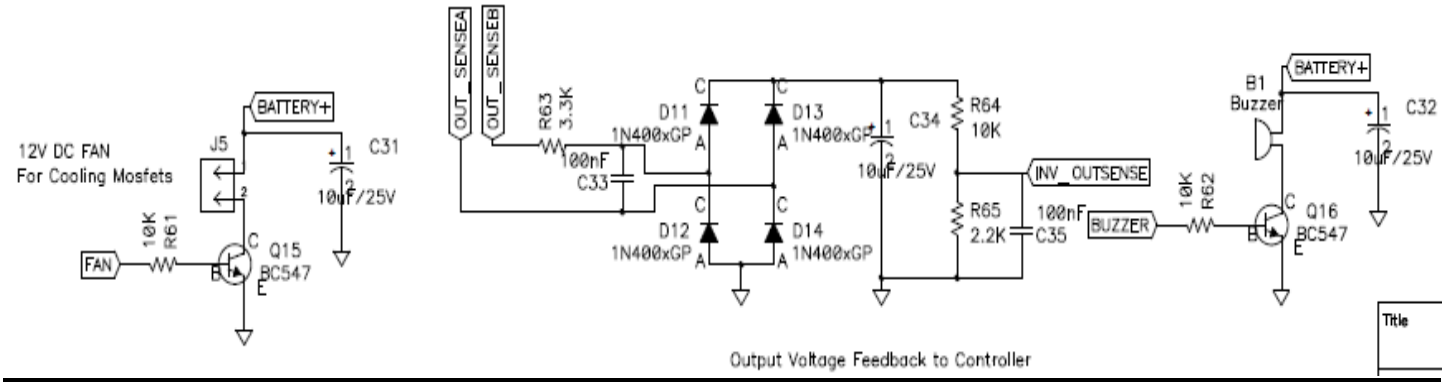

Figure 14. Output Sense, DC Fan and Buzzer operations

The Output Voltage in Inverter mode is sensed through the Auxiliary winding, which is filtered and rectified and given to the ADC of the microcontroller. When fall in the output voltage is sensed with the increase in the output Load, the duty cycle of the H Bridge drive (from microcontroller) is multiplied by a constant greater than 1 so that the final Inverter's output voltage is closer to the No Load Output Voltage (120V/220 VAC) and vice versa on moving from higher load to the lower load.

For example in this reference design, at no load condition, the duty cycle of the PWM drives given to the H Bridge are varied from 10 percent to 88 percent and when the load is constantly increased at the Inverter's output, the duty cycle of the PWM is multiplied by a factor greater than 1 so that we can regulate the output voltage within allowable range .While decreasing the load, vice versa followed.

If the duty cycle is increased beyond a point, the output voltage will start clipping and hence results in higher distortion .Hence care should be taken while regulating the output voltage through a feedback.

7) Microcontroller's Daughter Card :

This card has TMS320F280270 MCU, JTAG connector for programming & connector for interfacing all signals with main board. This is a digital power application & Most of the MCUs available in the market that finds use in digital power are 16 bit MCUs. TI offers C2000 - 32 bit MCU which can offer good performance which is most wanted in such applications. TMS320F280270PT is C2000 piccolo family MCU series which has unique peripherals like 3 ePWM channels with 6 outputs, 8 channel of 12 bit high speed SAR ADC, 22 digital GPIO shared with digital peripherals with a high performance 50MHz CPU for this application. In this design All analog and digital pins are being used; however, can be mapped in different way according to application change if required.

ePWM has Counter compare, Action qualifier, Dead Band, Trip Zone sub modules with internal connections of channel. Using these central aligned complementary PWM outputs is generated through ePWM output pins with phase shifting of 180 between ePWM1 and ePWM2 channel outputs. TI provides a very efficient IQ match library using which sine wave is generated very easily within fast loop of 50uS.

This MCU has 12 bit SAR ADC which can be configured from 7 cycle to 64 cycles long sampling. Using same, one can get very fast feedback signal for adjusting output voltage during inverter mode and charging current in charging mode. ADC is being triggered by 20 KHz PWM, so every 50 μS all samples are ready for feedback correction. ADC ISR is being used as control loop function and due to IQ math total time taken for sine wave generation, Output correction/charging current correction is around 7 μS.

TMS320F2802x0 I/Os are supported by programmable digital filter for each one of them, making the MCU glitch protected and application development easy with ruggedness.

The Daughter Card is connected to the main board through 24 Pin Connector. The controller card performs following main functions:

1. The AC Mains voltage is sensed and based on this, the relay is operated. (ACMAINSENSE and RELAY)
2. Than the four drives are generated by controller and given to the Gate Driver Inputs. (ALI,BLI,BHI and AHI)
3. The charging current (BOUT) in the Mains Mode and the Discharging current (BIN) in the Inverter mode is continuously tracked and in the error state, PWMs are tripped.
4. Also in the Inverter mode, the Output voltage of the Inverter is sensed (INV_OUTSENSE) and the duty cycle of the switching PWMs are modified to achieve the regulation in the output voltage.
5. Battery Voltage and the temperature of the Heat sink is also continuously monitored.
6. Based on the Load in the Inverter mode or Temperature rise of the Heat Sink, the DC fan is operated.
7. Various LEDs indications are given for User Interface.
8. Buzzer is operated if there is any detection of error state in the Main Board.

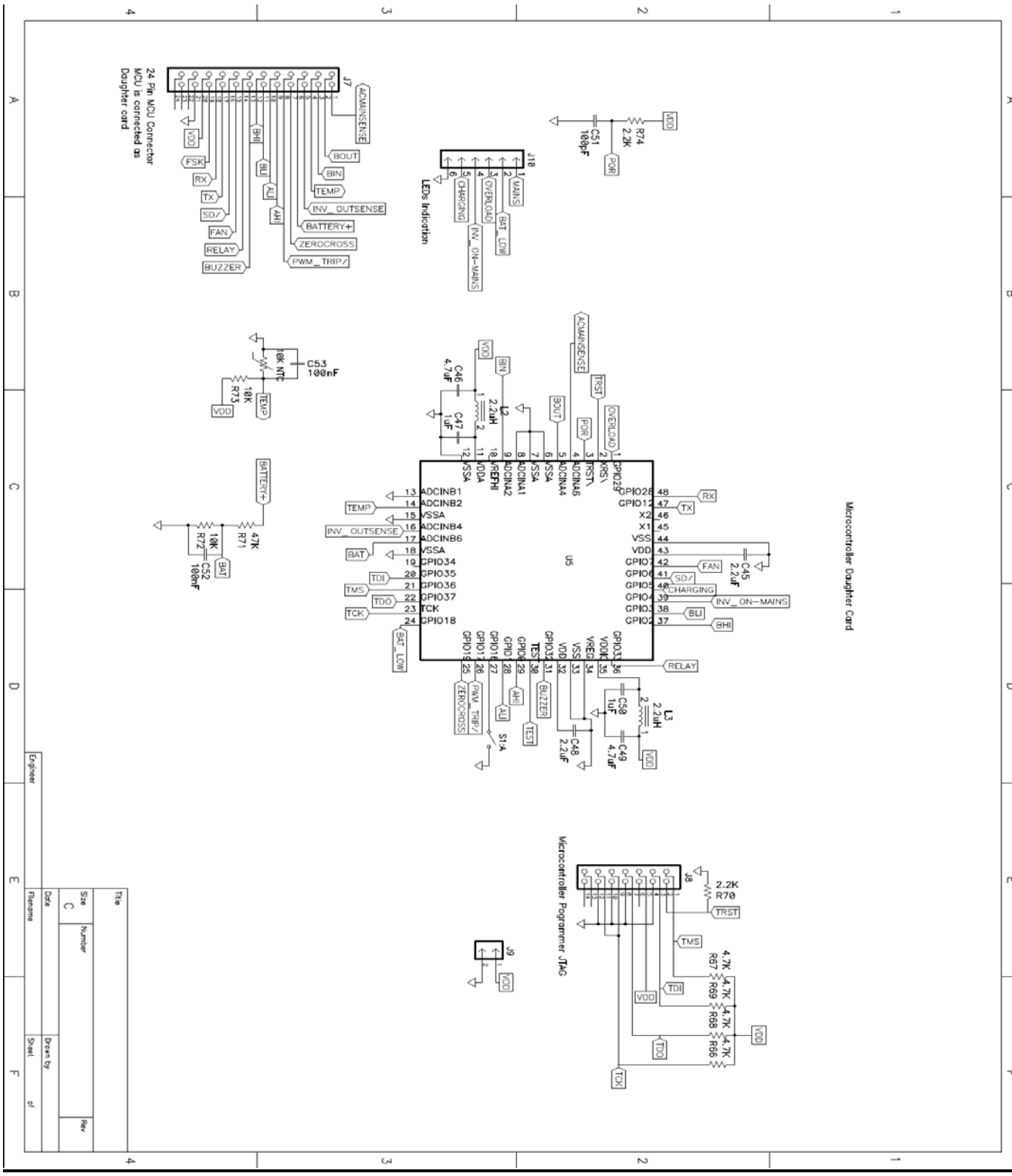

Figure 15. Daughter Card's Schematic

E) Steps to be followed while debugging/working on the hardware:

1. The Main power board needs to be checked first and hence daughter card should not be placed initially. Also all the initial testing should be done on current limited Lab Power Supply

2. The DC/DC output on the main board is checked for 3.3V output. Than both (the logic voltage VDD and VCC) the Power supply of the SM72295 is checked. The Voltage at VCC1 and VCC2 of SM72295 should be 10.5V with the 12V input Battery.

3. The daughter card should be programmed with the basic Inversion Software to generate required 4 drives to operate the H – Bridge. Before Inserting the Daughter card, Fuse F1 should be removed so that the PWM switching can be seen at the gates of each of the MOSFETs.

4. Now the Input drives to the Microcontroller be compared with the Gates waveform and it is needed to be insured that A Side waveform is complementary to the A Side Complementary waveform and similar for the B Side waveform.

5. Now the Fuse should be placed on the main board so the H – Bridge gets connected to the Power Supply. Again all the Gates of the MOSFETs has to be monitored. The Low Side FETs will be switching at 12V rail while the High Side FETs will switched at higher rail (Gate voltage must be 6 to 12V higher than the source voltage(12V) which is achieved through Boot Strap circuits of the gate Driver).

6. The Differential Signal seen across the High Side MOSFETs Sources(OUTP and OUTN) will be a Trilevel PWM Signal as mentioned Below:

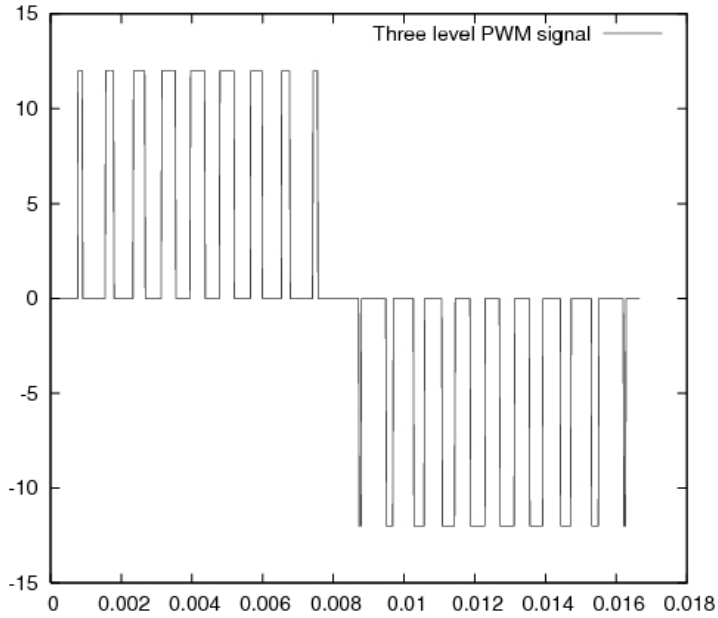

7. Now the 50 Hz boost transformer is placed across OUTP and OUTN and the output is filtered through 1 μF/400VAC Capacitors at the Inverter Output. The Inverter Output Should give 220V AC signal. Auxillary Winding output at INV_OUTSENSE be noted and used to program the feedback loop to have regulated output.

8. The Current Sense amplification is checked in the Inverter mode and the Over Discharge current protection is tested by increasing load at the output. (Till the No load condition at the output , the lab power Supply can be used and while increasing the load 12V/150AH battery can be used)
9. All the above stated steps are for the Basic inverter testing of the design. Below steps needed to be followed for the Main mode testing.

10. Initially the output of the Inverter is not connected to Pin 1 and 2 of Connector J4 .The priority is to first check the relay operation .Now when AC input is given to connector J3, it is sensed through AMC1100, the output of which is connected to the ADC of the microcontroller. Once it is in Valid range, firstly all the Inverter mode PWM switching is stopped and the relay is switched.

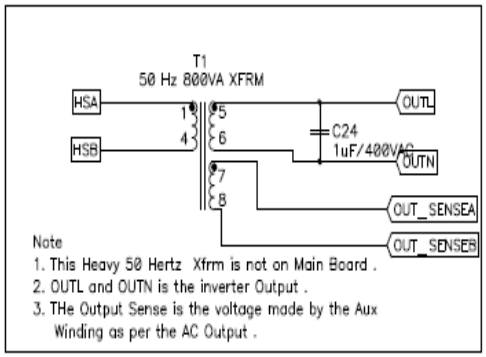

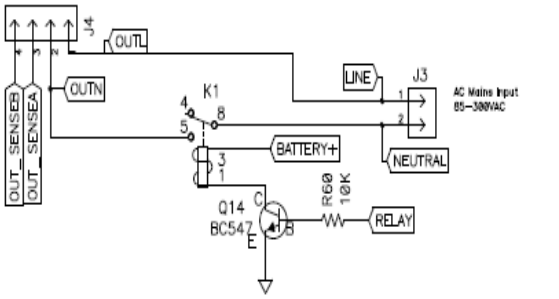

As indicated in the Schematic , Output of Inverter OUTL and OUTN is placed at the pin 1 and Pin2 of Header J4 .
When Valid AC is present , Relay is switched and Output of the Inverter is equal to Mains Input .

11. The output of the Inverter ie OUTL and OUTN is connected to Pin 1 and PIN2 of the Connector J4 hence the Mains Input becomes the Inverter Output through the Switched relay.

12. After this, the Lower FETs are tuned on with a small duty (5 to 10 percent) and the High Side\ MOSFETS are switched off. Now the Voltage across the current sense is measured by controller and if the corresponding current is less or more required by Charging algorithm than the duty cycle is altered correspondingly that is, duty cycle is increased if more Charging current is required and decreases if the charging current reduction is desired.

13. Finally the switching between the Inverter mode and Mains mode is checked by inserting or removing the Input AC mains Signals.

F) Waveforms and test results of 800VA Sine Wave Inverter's Reference Design

1. Inverter Mode Waveform :

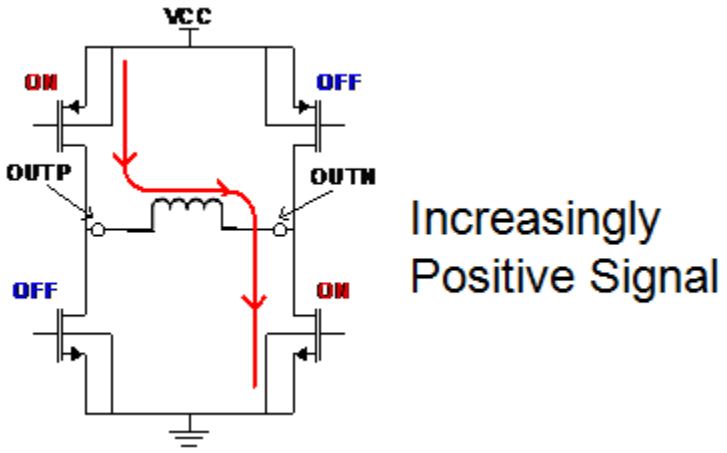

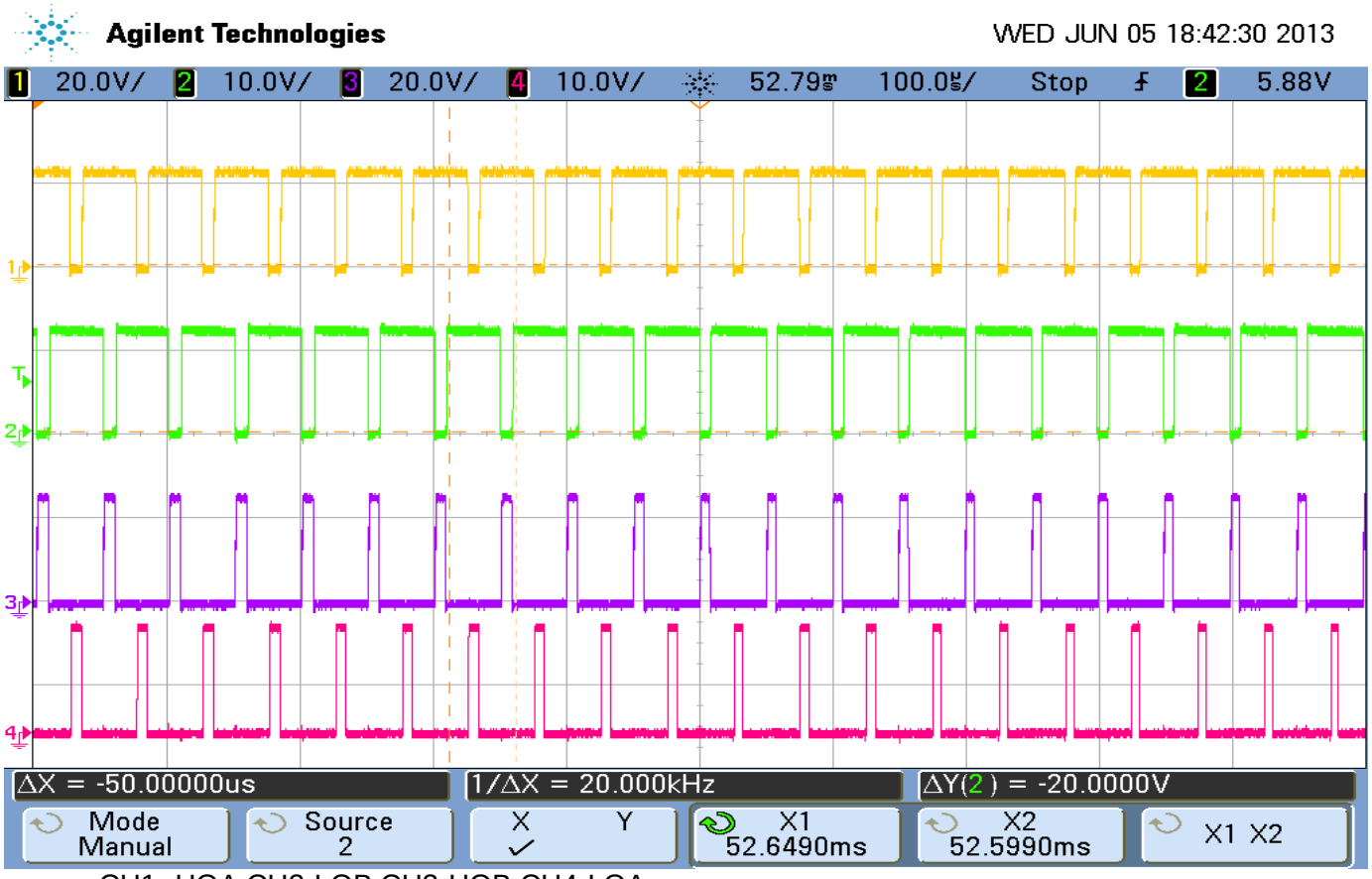

CH1- HOA CH2-LOB CH3-HOB CH4-LOA

Figure 16. Waveforms at the Gates of the MOSFETs in Inverter Mode (High Side A MOSFETs and B Side Low MOSFETs are conducting).

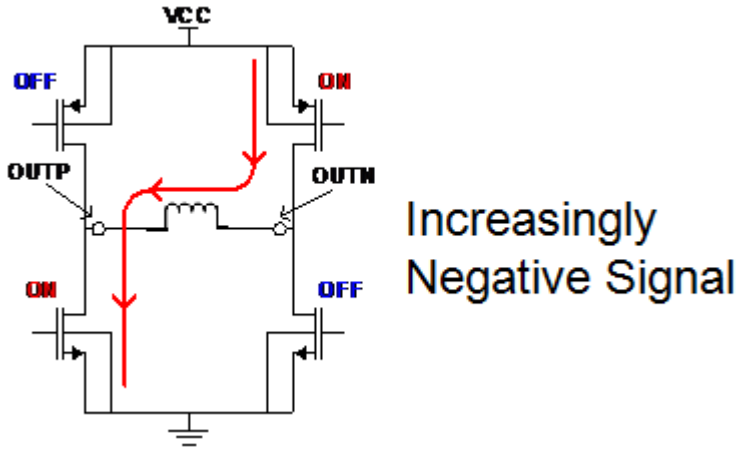

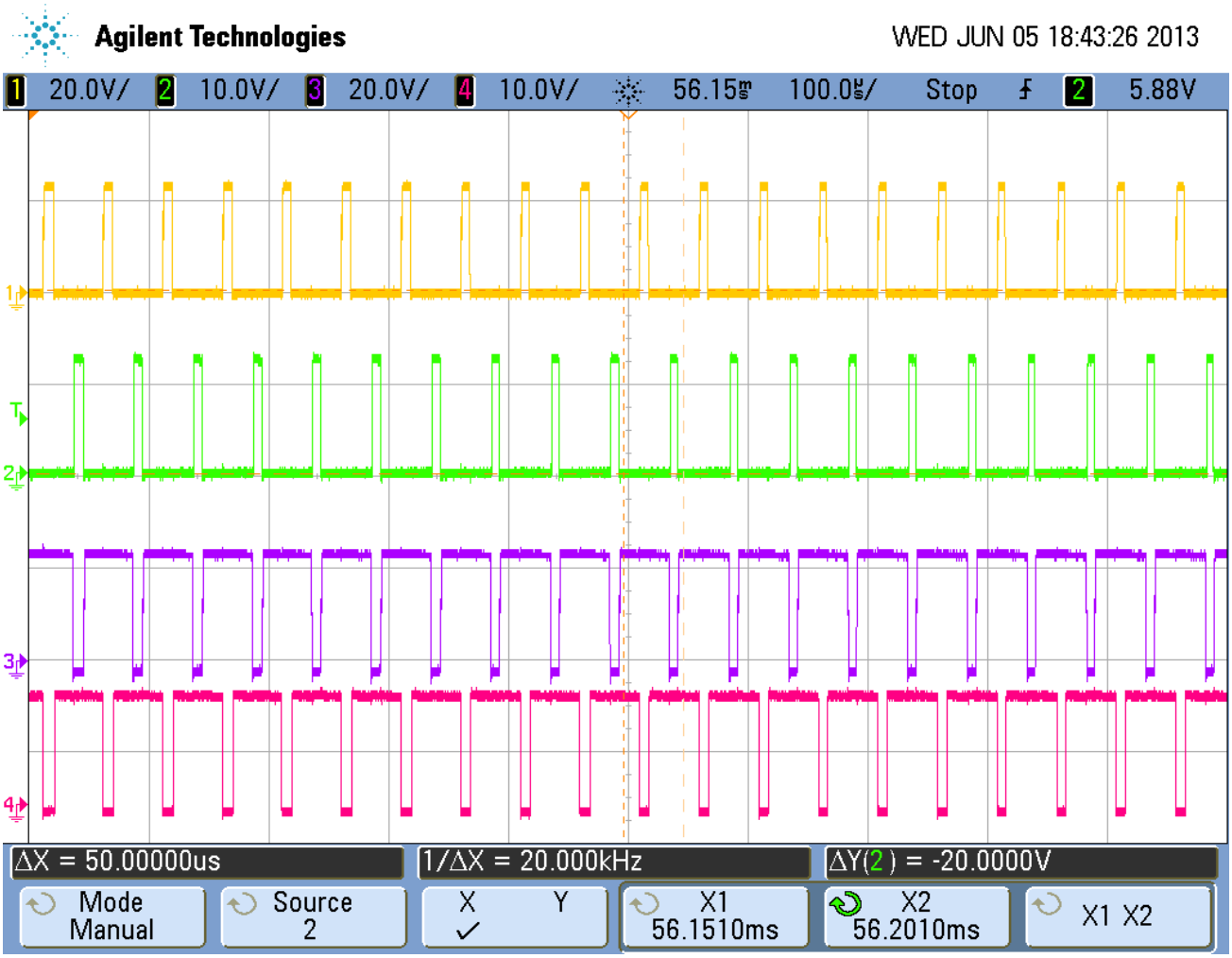

CH1- HOA CH2-LOB CH3-HOB CH4-LOA

Figure 17. FIG 17: Waveforms at the Gates of the MOSFETs in Inverter Mode (High Side B MOSFETs and A Side Low MOSFETs are conducting).

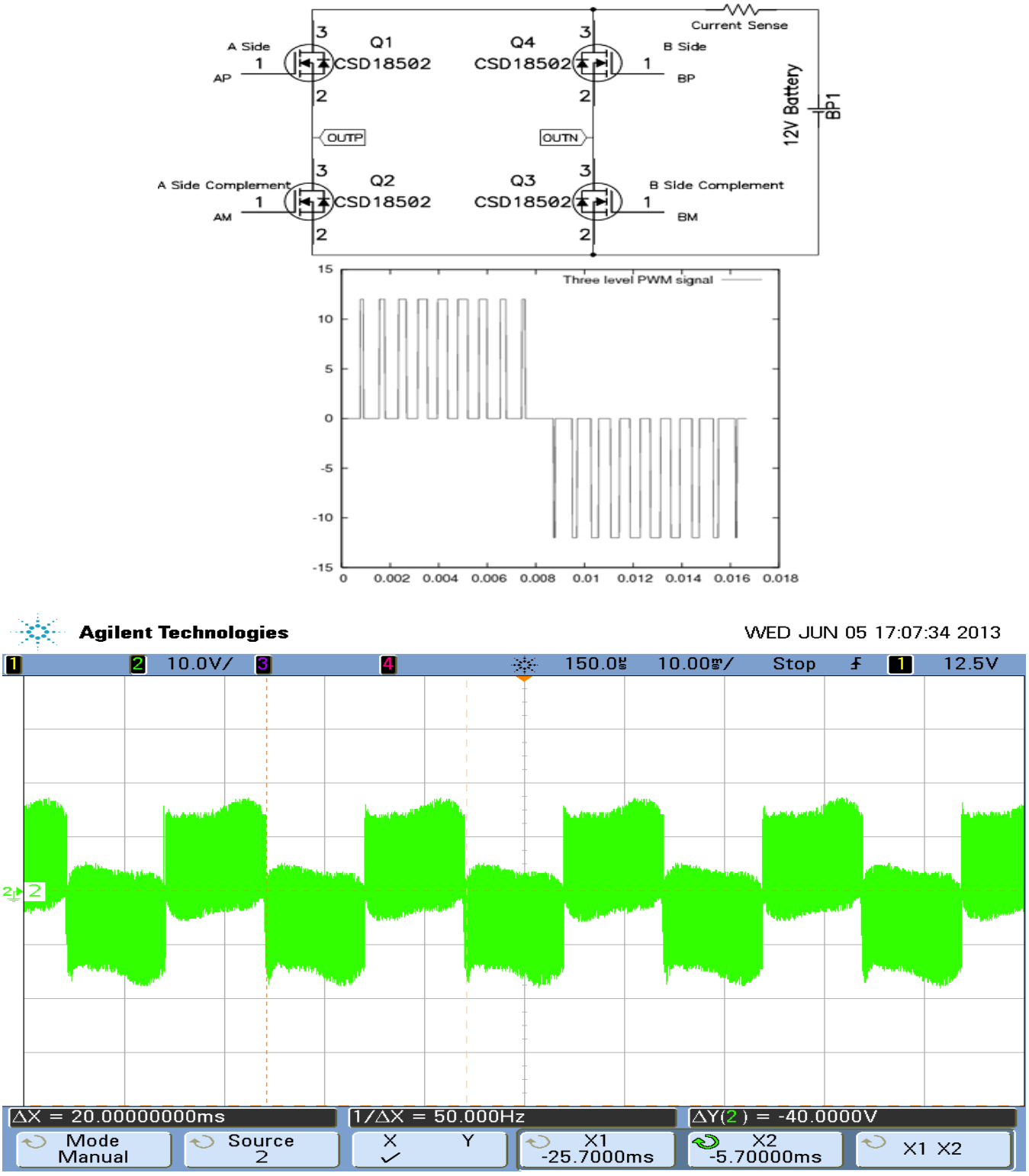

Figure 18. Trilevel Switching across the High Side A MOSFETS Source (HSA) and High Side B MOSFETs Source (HSB).

Trilevel Switching Zoomed in:

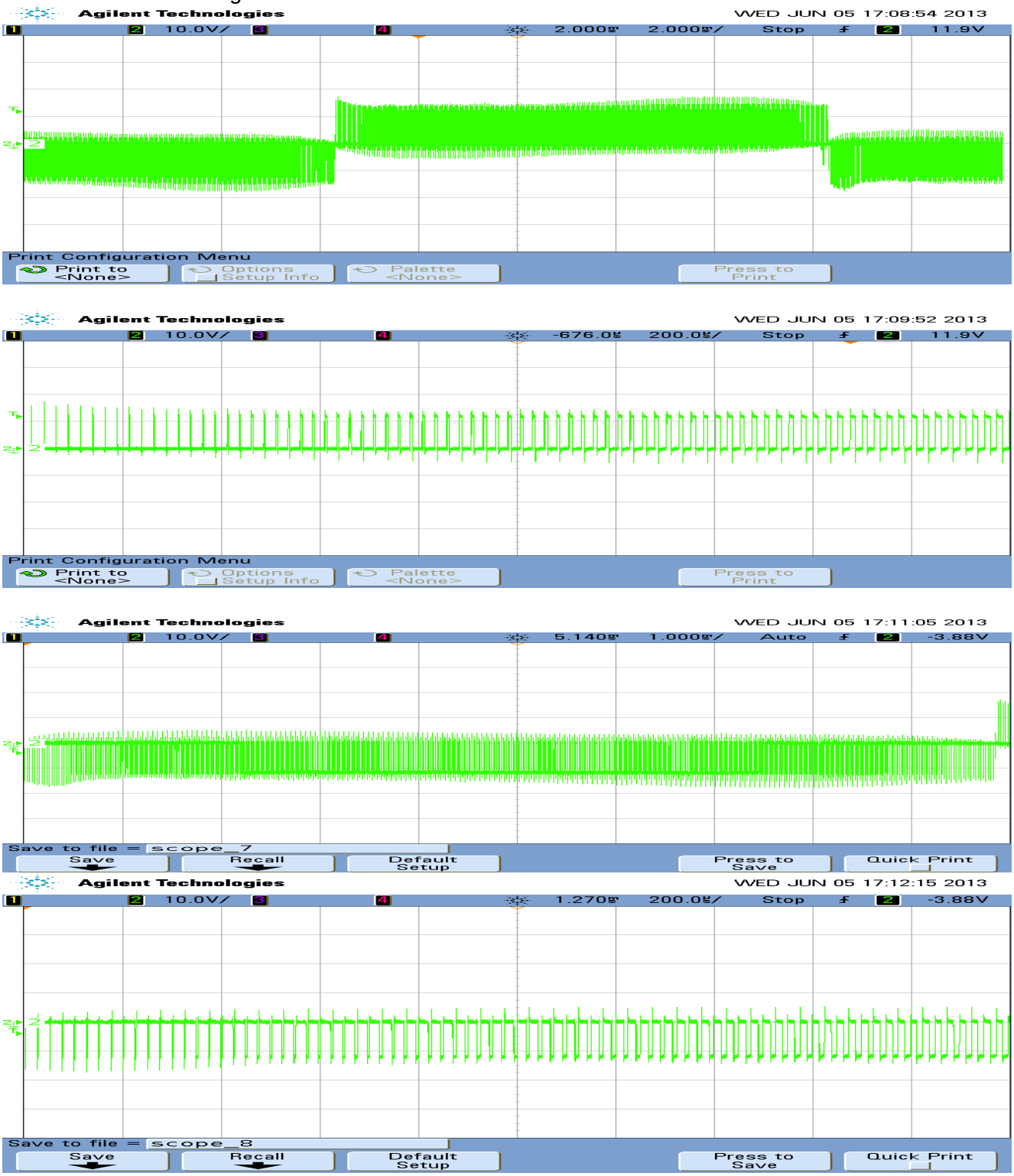

Figure 19. Trilevel Switching across the High Side A MOSFETS Source (HSA) and High Side B MOSFETs Source (HSB).

Insuring the Dead band between Complementary waveform to avoid the Short Circuit condition:

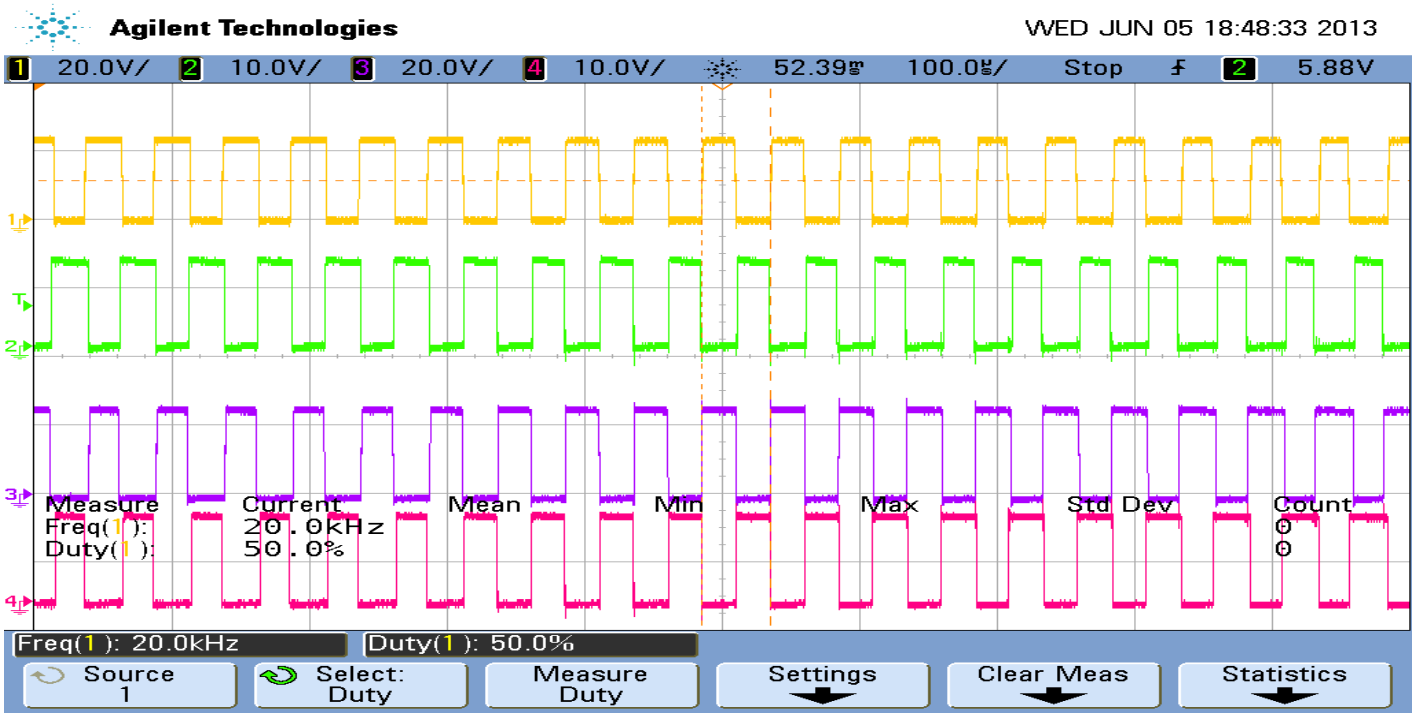

CH1- HOA CH2-LOB CH3-HOB CH4-LOA

Figure 20. Inverted Waveform (HOA-LOA and HOB-LOB) at the Gates of MOSFETS.

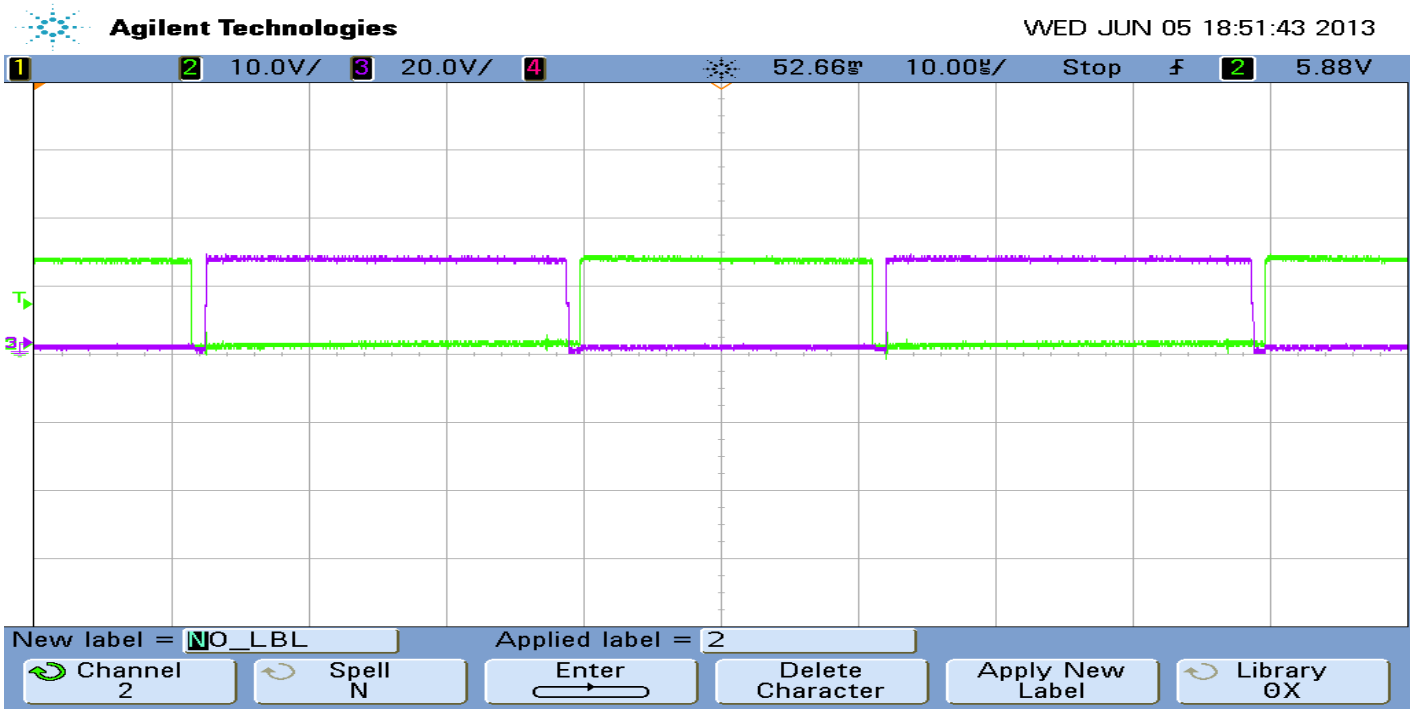

CH2-LOB CH3-HOB

Figure 21. Dead Band between Complementary HOB and LOB Pair.

PWM Switching at the Gates of the MOSFETs at No load (Inverter mode) with 12V Battery Input

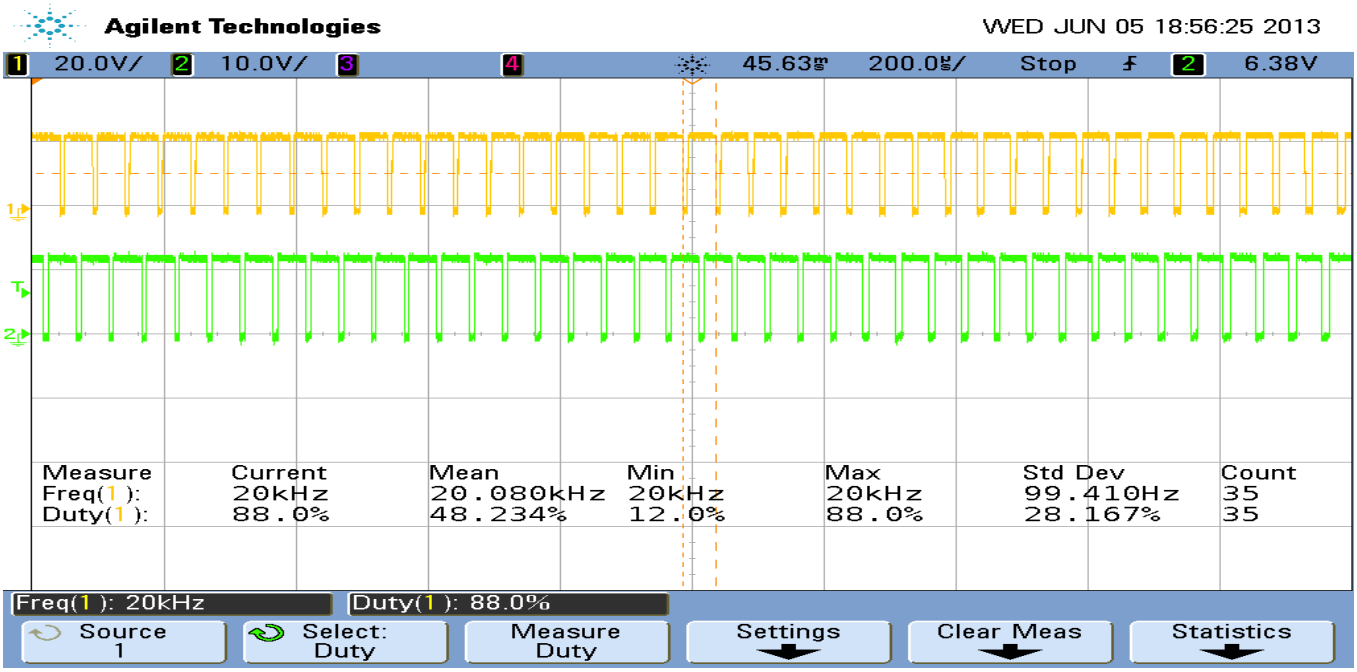

CH1- HOA CH2-LOB

Figure 22. Maximum duty cycle of the PWM Switching at No Load (at the Inverter's Output) is 88 percent

PWM Switching at the Gates of the MOSFETs at 400W (Inverter mode) with 12V Battery Input

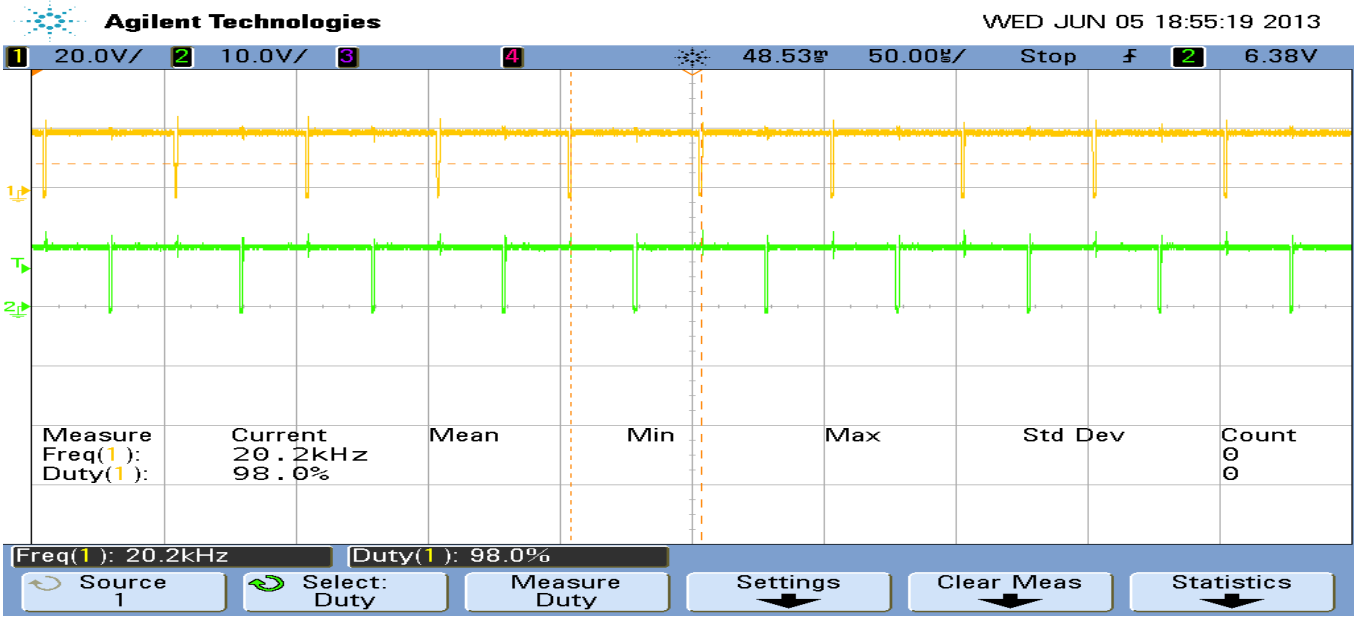

CH1- HOA CH2-LOB

Figure 23. Maximum duty cycle of the PWM switching at 400W (at the Inverter's Output) is increased to 98 percent to maintain Voltage regulation at the Inverter's output by sensing the Auxiliary Winding. This results in slight clipping of Sinusoidal waveform at the output.

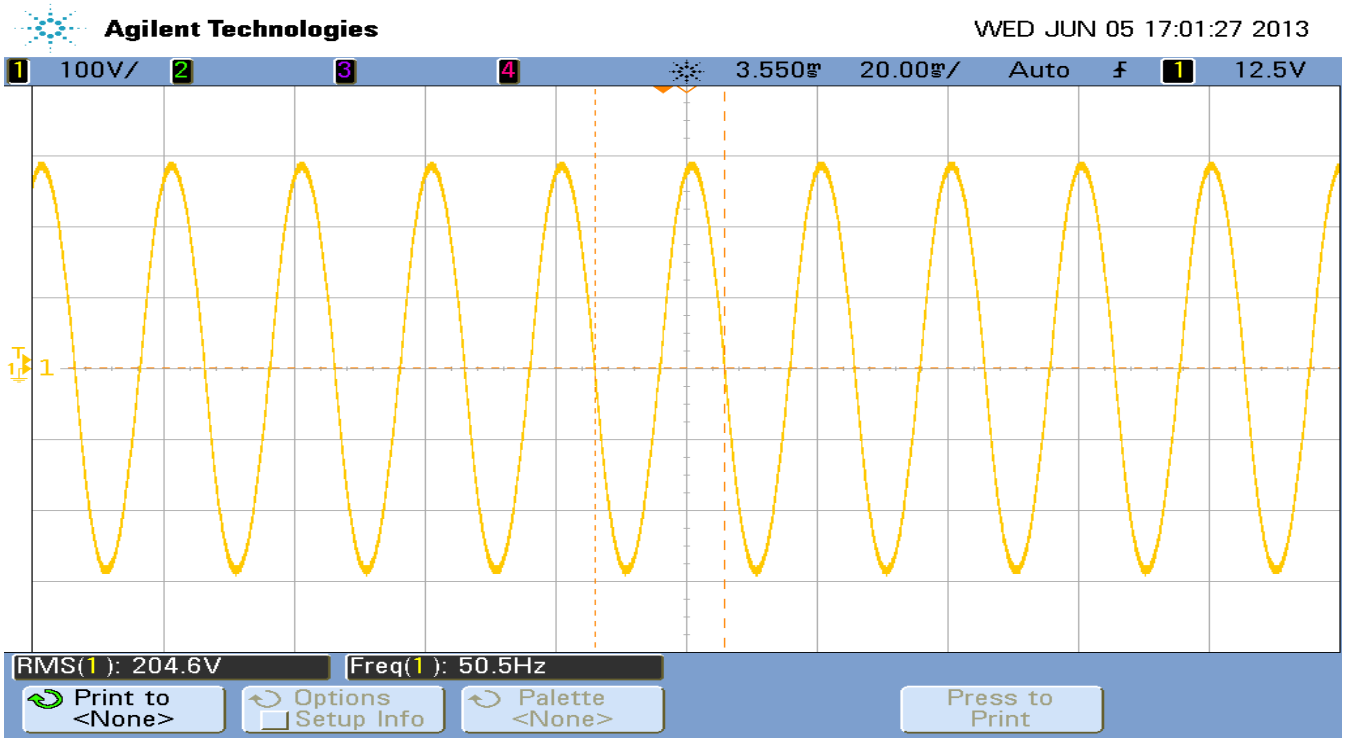

Figure 24. Inverter's Output at No Load with 12V battery Input:

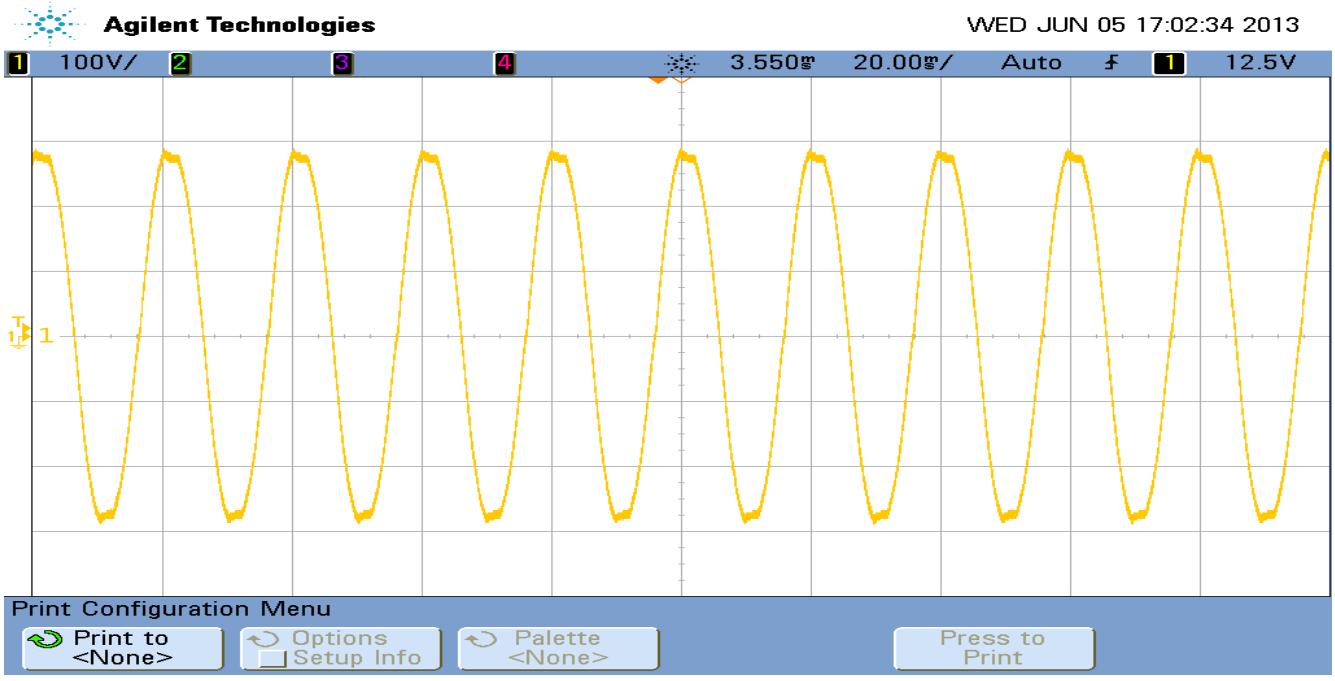

Figure 25. Inverter's Output at 400W Load with 12V battery Input:

2. Mains/Charging Mode Waveform :

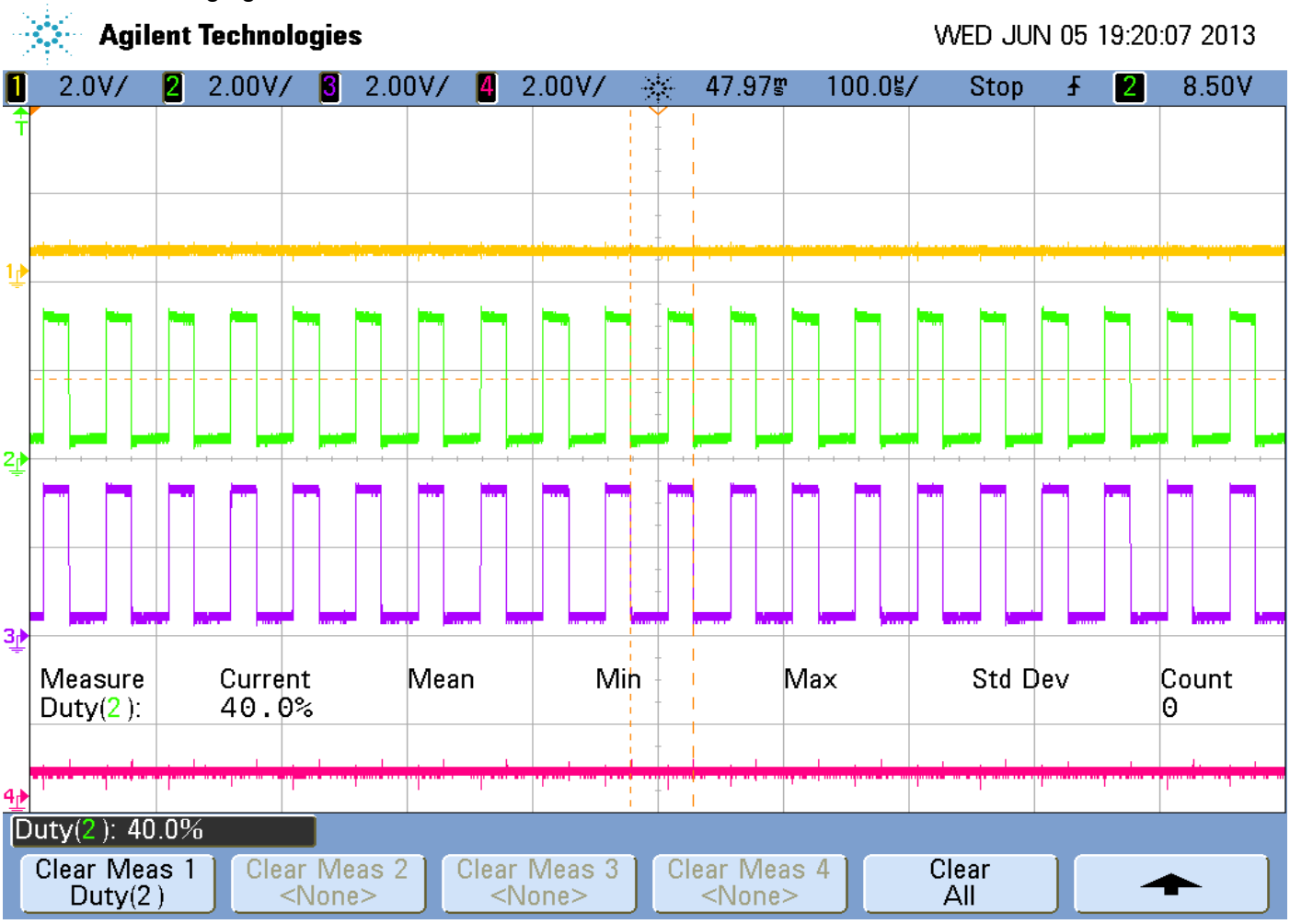

CH1- HOA CH2-LOB CH3-LOB CH4-HOA

Figure 26. Waveform during the Charging mode. The high side FET is switched off and both Lower Side FETs to ground in the H Bridge are switched at the same time with the duty Cycle proportional to the Battery Charge current.

IMPORTANT NOTICE

Texas Instruments Incorporated and its subsidiaries (TI) reserve the right to make corrections, enhancements, improvements and other changes to its semiconductor products and services per JESD46, latest issue, and to discontinue any product or service per JESD48, latest issue. Buyers should obtain the latest relevant information before placing orders and should verify that such information is current and complete. All semiconductor products (also referred to herein as “components”) are sold subject to TI’s terms and conditions of sale supplied at the time of order acknowledgment.

TI warrants performance of its components to the specifications applicable at the time of sale, in accordance with the warranty in TI’s terms and conditions of sale of semiconductor products. Testing and other quality control techniques are used to the extent TI deems necessary to support this warranty. Except where mandated by applicable law, testing of all parameters of each component is not necessarily performed.

TI assumes no liability for applications assistance or the design of Buyers’ products. Buyers are responsible for their products and applications using TI components. To minimize the risks associated with Buyers’ products and applications, Buyers should provide adequate design and operating safeguards.

TI does not warrant or represent that any license, either express or implied, is granted under any patent right, copyright, mask work right, or other intellectual property right relating to any combination, machine, or process in which TI components or services are used. Information published by TI regarding third-party products or services does not constitute a license to use such products or services or a warranty or endorsement thereof. Use of such information may require a license from a third party under the patents or other intellectual property of the third party, or a license from TI under the patents or other intellectual property of TI.

Reproduction of significant portions of TI information in TI data books or data sheets is permissible only if reproduction is without alteration and is accompanied by all associated warranties, conditions, limitations, and notices. TI is not responsible or liable for such altered documentation. Information of third parties may be subject to additional restrictions.

Resale of TI components or services with statements different from or beyond the parameters stated by TI for that component or service voids all express and any implied warranties for the associated TI component or service and is an unfair and deceptive business practice. TI is not responsible or liable for any such statements.

Buyer acknowledges and agrees that it is solely responsible for compliance with all legal, regulatory and safety-related requirements concerning its products, and any use of TI components in its applications, notwithstanding any applications-related information or support that may be provided by TI. Buyer represents and agrees that it has all the necessary expertise to create and implement safeguards which anticipate dangerous consequences of failures, monitor failures and their consequences, lessen the likelihood of failures that might cause harm and take appropriate remedial actions. Buyer will fully indemnify TI and its representatives against any damages arising out of the use of any TI components in safety-critical applications.

In some cases, TI components may be promoted specifically to facilitate safety-related applications. With such components, TI’s goal is to help enable customers to design and create their own end-product solutions that meet applicable functional safety standards and requirements. Nonetheless, such components are subject to these terms.

No TI components are authorized for use in FDA Class III (or similar life-critical medical equipment) unless authorized officers of the parties have executed a special agreement specifically governing such use.

Only those TI components which TI has specifically designated as military grade or “enhanced plastic” are designed and intended for use in military/aerospace applications or environments. Buyer acknowledges and agrees that any military or aerospace use of TI components which have ***not*** been so designated is solely at the Buyer's risk, and that Buyer is solely responsible for compliance with all legal and regulatory requirements in connection with such use.

TI has specifically designated certain components as meeting ISO/TS16949 requirements, mainly for automotive use. In any case of use of non-designated products, TI will not be responsible for any failure to meet ISO/TS16949.

Products		**Applications**	
Audio	www.ti.com/audio	Automotive and Transportation	www.ti.com/automotive
Amplifiers	amplifier.ti.com	Communications and Telecom	www.ti.com/communications
Data Converters	dataconverter.ti.com	Computers and Peripherals	www.ti.com/computers
DLP® Products	www.dlp.com	Consumer Electronics	www.ti.com/consumer-apps
DSP	dsp.ti.com	Energy and Lighting	www.ti.com/energy
Clocks and Timers	www.ti.com/clocks	Industrial	www.ti.com/industrial
Interface	interface.ti.com	Medical	www.ti.com/medical
Logic	logic.ti.com	Security	www.ti.com/security
Power Mgmt	power.ti.com	Space, Avionics and Defense	www.ti.com/space-avionics-defense
Microcontrollers	microcontroller.ti.com	Video and Imaging	www.ti.com/video
RFID	www.ti-rfid.com		
OMAP Applications Processors	www.ti.com/omap	**TI E2E Community**	e2e.ti.com
Wireless Connectivity	www.ti.com/wirelessconnectivity		

Mailing Address: Texas Instruments, Post Office Box 655303, Dallas, Texas 75265
Copyright © 2013, Texas Instruments Incorporated